IDRO ELETTRICA S.p.A.

CATALOGUE

Fire protection

Every problem has three solutions: my solution, your solution and the right solution

"Plato"

contact us:

YOU WILL FIND ALL THE UPDATES ON OUR WEBSITE
WWW.IDRO-ELETTRICA.IT

FOLLOW US ON SOCIAL MEDIA

idroelettricaspa | Idroelettrica Modena | @idroelettrica | idroelettrica.antincendio

CONTACTS

CONTACT CENTRE	+39 059 936911 | +39 059 936990	info@idro-elettrica.it
SALES DEPARTMENT	▪ Quotation request: ▪ Order management and delivery dates:	commerciale@idro-elettrica.it vendite@idro-elettrica.it
FIRE-FIGHTING PRODUCTS SUPPORT SERVICE		service@idro-elettrica.it
SUPPORT SERVICE FOR OTHER PRODUCTS, SPARE PARTS AND STOCK AVAILABILITY		ufficio.bellini@idro-elettrica.it
EXPORT OFFICE		export@idro-elettrica.it
TECHNICAL DEPARTMENT	▪ Technical consultancy:	tecnico@idro-elettrica.it
ADMINISTRATION		amministrazione@idro-elettrica.it
PURCHASING DEPARTMENT		acquisti@idro-elettrica.it

TERMS AND CONDITIONS OF SALES FROM PAGE 283

THE COMPANY

Founded in 1979 by Giancarlo Alberghini, who immediately defined its objective: to solve all the problems related to pumping water in a professional, fast and decisive way. The second generation already forms part of the Company management, contributing to a "smart" vision of the company.

After introducing several innovative products in the fire-fighting field, the company obtained great recognition from the market, thanks also to the team of trusted and competent people that the management knew how to train.

HISTORY

1979

Idroelettrica was founded in San Cesario sul Panaro (MO) by Giancarlo Alberghini, a young entrepreneur, who had a passion and set up a small workshop to construct electric pumps and electrical panels.

1992

The company leaves the small workshop and moves to an actual industrial plant of 4,500 square metres, thereby strengthening its identity across the national territory

1994

The first pumping unit for fire-fighting is produced according to the UNI 9490 standard

1999

It achieves the ISO 9001 Quality Management System certification issued by DNV Business Assurance Italia Srl.

2001

Construction of the first prefabricated fire-fighting room called Firebox.

2008

The first FIREBOX made according to UNI 11292 is released. Success is immediate.

2018

The new production site, which triples the company spaces, is inaugurated. In addition to the production and warehouse departments, the new facility houses new executive offices, research and development offices, a conference hall, a permanent training station and a 130kW photovoltaic system which provides a significant contribution to the energy saving policies, in which the company has always been at the forefront.

Fire-fighting units catalogue - Edition: September-2021

The technical data are not binding and can be modified without prior notice | The images are indicative and not binding

CERTIFICATIONS

IDROELETTRICA SPA always works according to the highest quality standards. It has been UNI EN ISO 9001 certified since 1999, and obtained the MANAGEMENT SYSTEM CERTIFICATE according to UNI EN ISO 9001:2015 in 2015

IDROELETTRICA SPA manufactures all its steel products in compliance with UNI EN 1090. For this purpose, it obtained the relative certification and trained all its workshop operators.

ACKNOWLEDGMENTS

IDROELETTRICA SPA has a Share Capital of €2,000,000 (fully paid-up), and has been awarded the highest level of economic and financial reliability by the most accredited European Credit Scoring institutions

SAFETY

We believe that quality derives from safety, which is why we consider the culture of the operators to be fundamental, which we guarantee through formation and training courses on:

- Work in confined spaces (Italian L.D. 81/2008 and Italian Presidential Decree 177/2011)
- Operating cranes and mobile cranes
- Works at a height
- Driving forklifts
- Operating mobile elevating work platforms (MEWPs)
- Qualified personnel for tasks with an electrical risk (PEI-Qualified Person, PES-Expert Person, PAV-Informed Person)
- Driving exceptional transport vehicles

MEMBERSHIP

IDROELETTRICA SPA is a member of UNI and of the UNI commission "ACTIVE PROTECTION AGAINST FIRE" UNI/CT 034/GL 07 WATER SYSTEMS AND COMPONENTS.

Licenza 0036 del 13/11/2013

IDROELETTRICA SPA produces not only for the domestic market, but also for international markets, where the reference guidelines are the American NFPA. With this in mind, it chose to become a member of the National Fire Protection Association to also always be updated on this type of international regulation

IDROELETTRICA SPA is a member of the major industry associations with which it collaborates in organising training courses dedicated to the fire-fighting sector throughout the Italian territory.

The technical data are not binding and can be modified without prior notice | The images are indicative and not binding

FEATURES EUROFIRE SYSTEMS

EUROFIRE
modular firefighting•pumpset

VERTICALFIRE
modular firefighting•pumpset

Pump

PUMPS VERTICAL TURBINE PUMP

Pump

CENTRIFUGAL PUMPS BACK-PULL OUT

Structure

Accessories

Motor Pump Components

Intake

Delivery

Power supply

INSPECTIONABLE CLAPET VALVES

An **Inspectable check valve** is fitted on the delivery of every main pump to facilitate maintenance.

Delivery manifold in electro-welded and painted steel, double flanged, complete with fittings on the pumps and utilities, with a diameter that allows speeds to be kept lower than those set forth in **UNI EN 12845 13.2.3**

MANIFOLD PLACED AT H ≥ 2 m

The technical data are not binding and can be modified without prior notice | The images are indicative and not binding

BASES

Base in sturdy welded and painted steel sections.

GROUND ANCHORS

Pump-Sets **independently secured to the ground** to limit the transmission of vibrations **UNI 11292 6.6**

>>

>>

Intake kit consisting of an eccentric cone with a horizontal upper part and an opening angle of less than 20° installed on the intake side of the main pumps, made without edges and obstructions to minimise pressure drops; a minimum diameter of 65 mm to guarantee maximum water speed, suitable for the designed flow rate **UNI EN 10.6.2.1.**, complete with a vacuum gauge with tap and throttle shut-off valve on the side with the larger diameter.

INTAKE KIT WITH ECCENTRIC FITTINGS

DELIVERY COLUMN

Delivery column supported autonomously with respect to the pump **UNI EN 12845 10.1**, with hydraulic accessories enlarged to a diameter that allows speeds to be kept lower than those set forth in **UNI EN 12845 13.2.3**

Complete with a throttle valve with a locking option, with a position indicator and manual reducer where required, an inspectionable clapet type check valve with reduced pressure drops and a diaphragm recirculation circuit for cooling the main pumps during operation at zero flow **UNI EN 12845 10.5.**

Power supply

ELECTRIC CABLES UNI EN 12845 10.8.2.

The wiring inside the unit consists of FG16 OM16-0.6/1 kV type cables, compliant with the standard and having a combustion behaviour in conformity with **IEC EN 60332-3-24** and a conductor diameter of at least 2.5 mm² of Cu **UNI EN 12845 10.8.2.**

CONTROL PANELS EPRO

Main pump control panels fitted with a preset Epro control unit to manage the main pump according to **UNI-EN12845**, complete with a display to view and record data and alarms

>> Accessories

>> Motor Pump Components

CARDAN JOINT

Cross cardan joint to connect the pump to the diesel engine.
Using the cardan joint prevents the transmission of vibrations between the diesel engine and the pipes.

HEAT EXCHANGER

Using the heat exchanger instead of the radiator allows the cooling works that are to be set up in the room to be reduced in accordance with **UNI 11292**. The water/water exchangers fitted on our units are designed by us and are manufactured in our factory.

DOUBLE CHAMBER TANK

Double-walled fuel tank, with internal stainless steel wall to eliminate the risk of clogged pipes due to oxidation residue, which can guarantee 6 hours operating autonomy at full power. Complete with visual level indicator, low level alarm float connected to the EPRO Control Unit, tank outlet fuel filter and direct support that is autonomously secured to the ground UNI 11292: 2019 6.10.1

The technical data are not binding and can be modified without prior notice | The images are indicative and not binding

SPRINKLER KIT

Sprinkler Kit for Fire Protection of the Water System **UNI EN 12845:2020 10.3.2**
The kit consists of a sprinkler with a standard 141°C response bulb, pendent with protective cage, a flow switch Ø 2" to detect sprinkler operation with CE marking and compliant with EN 12259-5 and test and drain circuit with a nom. diameter >15mm
The lengths of the free straight sections upstream and downstream of the flow switch are respected

FLOW METER

Flow meter with delayed reading for vertical/horizontal installation. Accuracy ~ 5% on full scale value. Internal recirculation circuit with self-cleaning function.
Allows the flow rate of the main pumps to be measured during testing and periodic checks **UNI EN 12845:2020 20.3.2.5 – 20.3.4.2**

Jockey CIRCUIT

Jockey pump automatic start and stop circuit complete with a pressure switch, class 1.6 pressure gauge, check valve, shut-off valve and 20 ℓ diaphragm tank

FEATURES FOR FIRE-FIGHTING PUMPING UNITS

RANGE OF PRODUCTS
FIRE PROTECTION

FIREBOX®
modular firefighting•system

VERTICALFIRE
modular firefighting•pumpset

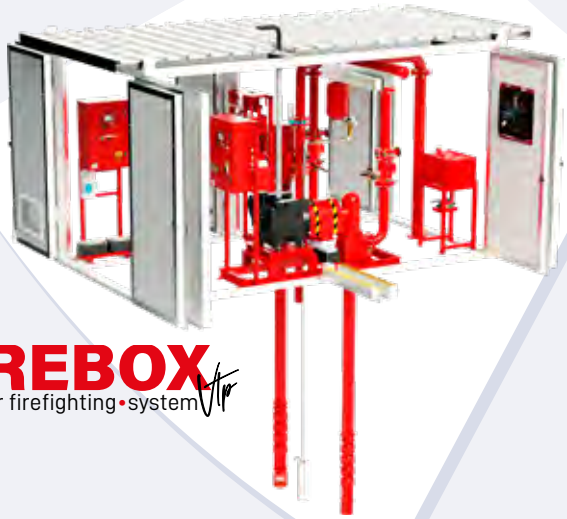

FIREBOX
modular firefighting•system

FIREBOX®
modular firefighting•system

The technical data are not binding and can be modified without prior notice | The images are indicative and not binding

EUROFIRE SOM
modular firefighting•pumpset

FIREBOX Som
modular firefighting•system

EUROFIRE
modular firefighting•pumpset

FIREBRAKE
modular firefighting•water storage integrated

FIREBLOCK
modular firefighting•system complete of water storage

FIREBOX SOLUTIONS FOR INTEGRATED FIRE-FIGHTING SYSTEMS

FEATURES
FIREBOX SYSTEMS

STRUCTURE R60

A bearing structure in steel profiles, sized to obtain a **fire resistance of 60 minutes (R60) UNI EN 12845:2020 10.3.1.**

FORCED VENTILATION

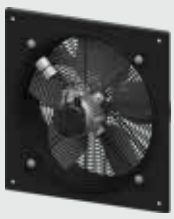

When a diesel engine is installed, there is an opening fitted with a protective stainless steel grid and an axial fan powered by the electricity mains or by UPS EPRO ENERGY through which the hot air is ejected, if necessary.
The fan also works in ambient air exchange mode. The operating cycles (pause/work) can be set from the EPRO control unit and are controlled by an NTC temperature probe.
The fan flow rate is calculated in accordance with **UNI 11292:2019 5.4.2** and can highly guarantee the air change required by the standard.

The technical data are not binding and can be modified without prior notice | The images are indicative and not binding

SIDE PANELS A2-s1,d0

The side buffer of FIREBOX consists of sandwich panels that make it thermally insulated, thanks to the 80 mm rock wool (EI60); therefore, they are set up on all sides of the opening walls with **A2-s1, d0** fire reaction efficiency, as set forth in **UNI 11292 5.1.**

ROOFING FIRE-RESISTANCE RATING 60

Cover with sandwich panel with corrugated profile thickness 80 mm, fire resistance **FIRE-RESISTANCE RATING 60 UNI EN 12845 10.3.1** , reaction to fire **A2-s1, d0 UNI 11292 5.1.**

EXHAUST GAS EXPULSION PIPE

Exhaust gas expulsion pipe of suitable diameter, adequately insulated and protected against accidental contact by means of high temperature ceramic fabric and/or stocking. Exhaust outlet at a height > 2.4 m **UNI 11292 6.5.**

EMERGENCY PANEL

EPRO ENERGY

Auxiliary electrical panel compliant with IEC standards, with a 1000 VA uninterruptible power supply (UPS) served by 2 dedicated batteries to power the axial fan even in case of power failure to dissipate hot air and to power the emergency ceiling light; thereby ensuring the autonomy set forth in UNI 11292 5.4 for the fire-fighting system to work.

FIELDS OF APPLICATION REFERENCES

FOOD AND BEVERAGE

LSD

The technical data are not binding and can be modified without prior notice | The images are indicative and not binding

INDUSTRY

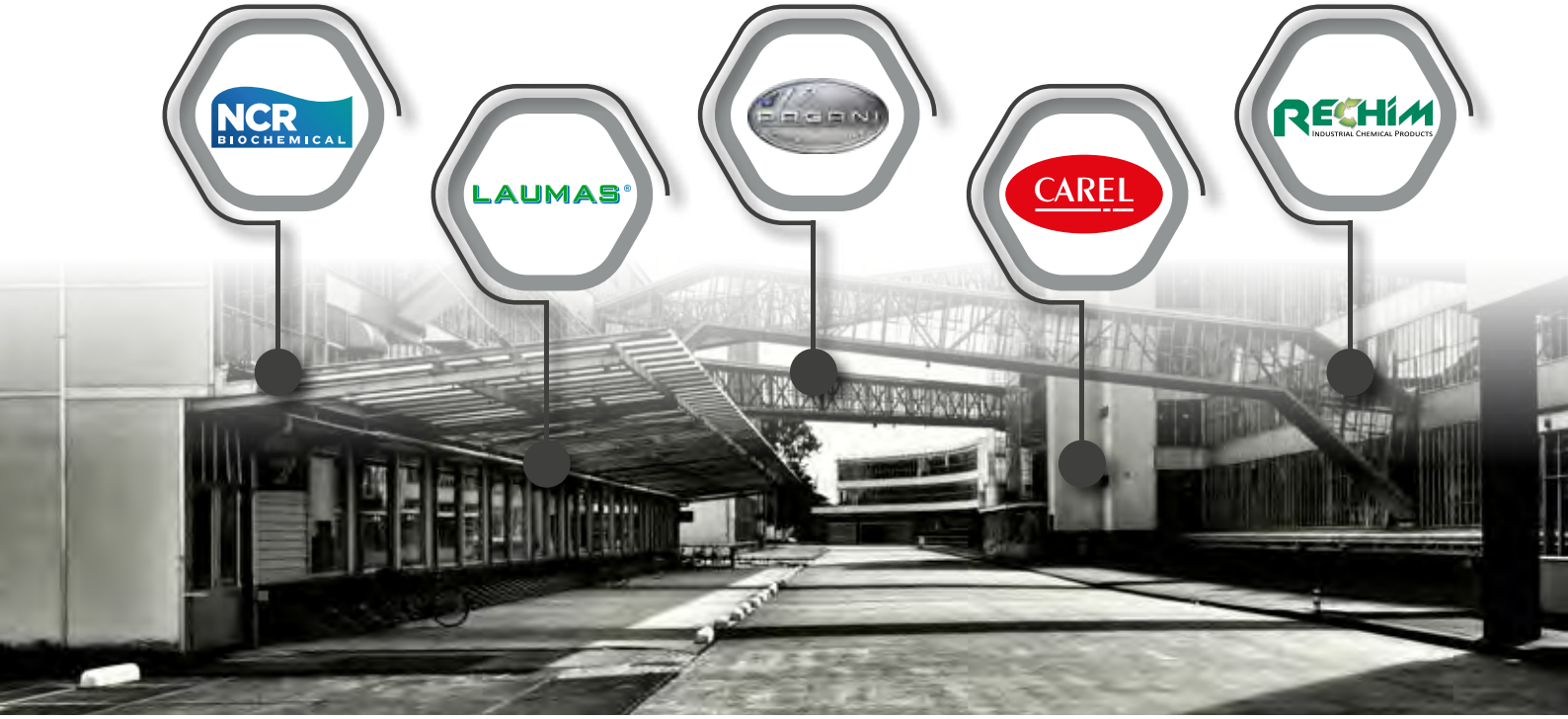

INFRASTRUCTURE & SERVICES

NOT ONLY FIRE PROTECTION
IDROELETTRICA IS ALSO ...

The technical data are not binding and can be modified without prior notice | The images are indicative and not binding

MORE INFORMATION IN THE PRO CATALOGUE

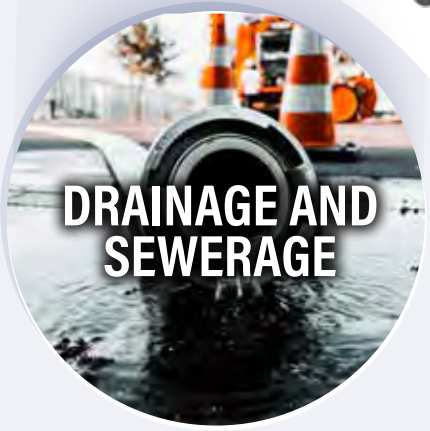

CONTENTS

EXAMPLES OF INSTALLATION

from page 22

EUROFIRE
WITH MOTOR PUMP

from page 93

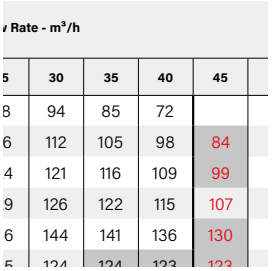

Rate - m³/h				
5	30	35	40	45
8	94	85	72	
6	112	105	98	84
4	121	116	109	99
9	126	122	115	107
6	144	141	136	130
5	124	124	123	123

HORIZONTAL PUMP SELECTION TABLES

from page 24

VERTICALFIRE WITH ELECTRIC PUMP

from page 145

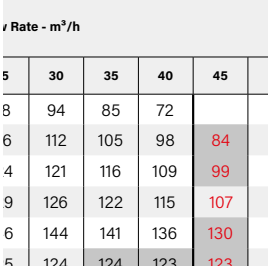

Rate - m³/h				
5	30	35	40	45
8	94	85	72	
6	112	105	98	84
4	121	116	109	99
9	126	122	115	107
6	144	141	136	130
5	124	124	123	123

VERTICAL PUMP SELECTION TABLES

from page 32

VERTICALFIRE WITH MOTOR PUMP

from page 169

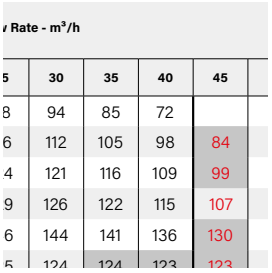

Rate - m³/h				
5	30	35	40	45
8	94	85	72	
6	112	105	98	84
4	121	116	109	99
9	126	122	115	107
6	144	141	136	130
5	124	124	123	123

SUBMERSIBLE PUMP SELECTION TABLES

from page 37

EUROFIRE SOM

from page 193

JOCKEY ELECTRIC PUMPS

from page 39

ACCESSORIES

from page 215

EUROFIRE
WITH ELECTRIC PUMP

from page 43

ELECTRICAL PANELS FOR FIRE PROTECTION

from page 223

Fire-fighting units catalogue - Edition: September-2021

The technical data are not binding and can be modified without prior notice | The images are indicative and not binding

CONTENTS

WATER RESERVES

from page 239

INTRODUCTION TO THE FIRE-FIGHTING SYSTEMS

from page 247

FIREBOX

from page 250

FIREBOX WITH VTP

from page 256

FIREBLOCK

from page 258

FIREBOX IN VIBRATED REINFORCED CONCRETE

from page 264

FIREBOX SOM

from page 266

FIREBRAKE

from page 268

FIRECOMPACT

from page 270

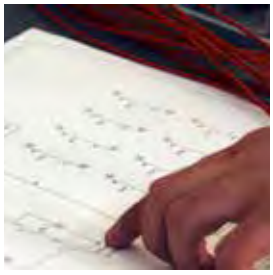

DESIGN SERVICES

from page 272

Fire-fighting units catalogue - Edition: September-2021

APPLICABLE STANDARDS IN FIRE-FIGHTING SYSTEMS

- The described fire-fighting systems are manufactured in accordance with the following directives and technical standards.
- The machines are entirely produced in the Idroelettrica SpA facility according to the criteria set forth by: European Directive 2006/42/EC – Machinery Directive
- The technical file is entirely drawn up by the technical staff of Idroelettrica SpA and is kept at the company headquarters.
- All the machines are tested in the Idroelettrica SpA facility

NORMATIVE REFERENCE	
UNI EN 12845:2020	Fixed firefighting systems – Automatic sprinkler systems – Design, installation and maintenance
UNI 10779:2021	Fire-fighting systems – Hydrant systems – Design, Installation and operation
UNI 11292:2019	Rooms designed to house pumping units for fire-fighting systems - Construction and functional characteristics
UNI EN 1090-1	Execution of steel and aluminium structures – Part 1: requirements for conformity assessment of structural components
UNI EN 1090-2	Execution of steel structures and aluminium structures – Part 2: technical requirements for steel structures
European Directive 2006/42/EC	Directive 2006/42/EC of the European Parliament and of the Council of 17 May 2006 relating to machinery and amending Directive 95/16/EC (recast)
European Directive 2014/30/EU	Directive 2014/30/EU of the European parliament and of the Council, relating to electromagnetic compatibility
European Directive 2014/35/EU	Directive 2014/35/EU of the European Parliament and of the Council, relating to electrical equipment intended for use within certain voltage limits.

#STANDARDS

EC DECLARATION OF CONFORMITY

Every fire-fighting pressurisation unit and FIREBOX manufactured by Idroelettrica is accompanied by an **EC** Declaration of Conformity that is drawn up in accordance with **Machinery Directive 2006/42/EC**.

Fire-fighting pressurisation systems that do not comply with **UNI EN 12845/UNI 11292** in many respects, are found on the market. The certificates accompanying them are often incomplete or are outright fakes.

Therefore, we urge you to compare our products only with those of manufacturers who are able to provide correct certifications and whenever you request an offer, we advise you to also ask for a copy of the certification to evaluate its reliability.

The implementing regulation of **Italian Presidential Decree 151 of 1 August 2011** was published in the Official Journal of 22 September 2011. This Italian Presidential Decree expands the criminal liability of the designer and the owner of the facility. In order not to incur penalties, great attention must be paid to the choice of the components, their compliance with current standards and their certification methods.

ACCORDING TO THE ABOVE MENTIONED DIRECTIVE, IT MUST CONTAIN:

1. **The Type of the product or its Series**
2. **The Serial Number** of the product which will unambiguously identify both the product and the related technical file.
3. **The DIRECTIVES and STANDARDS** that have been used as a reference in the design, implementation and testing of the product (**UNI EN 12845 / UNI 11292**)
4. **The signature of the person in charge** of the certification process
5. **The signature of the legal representative** of the manufacturing company

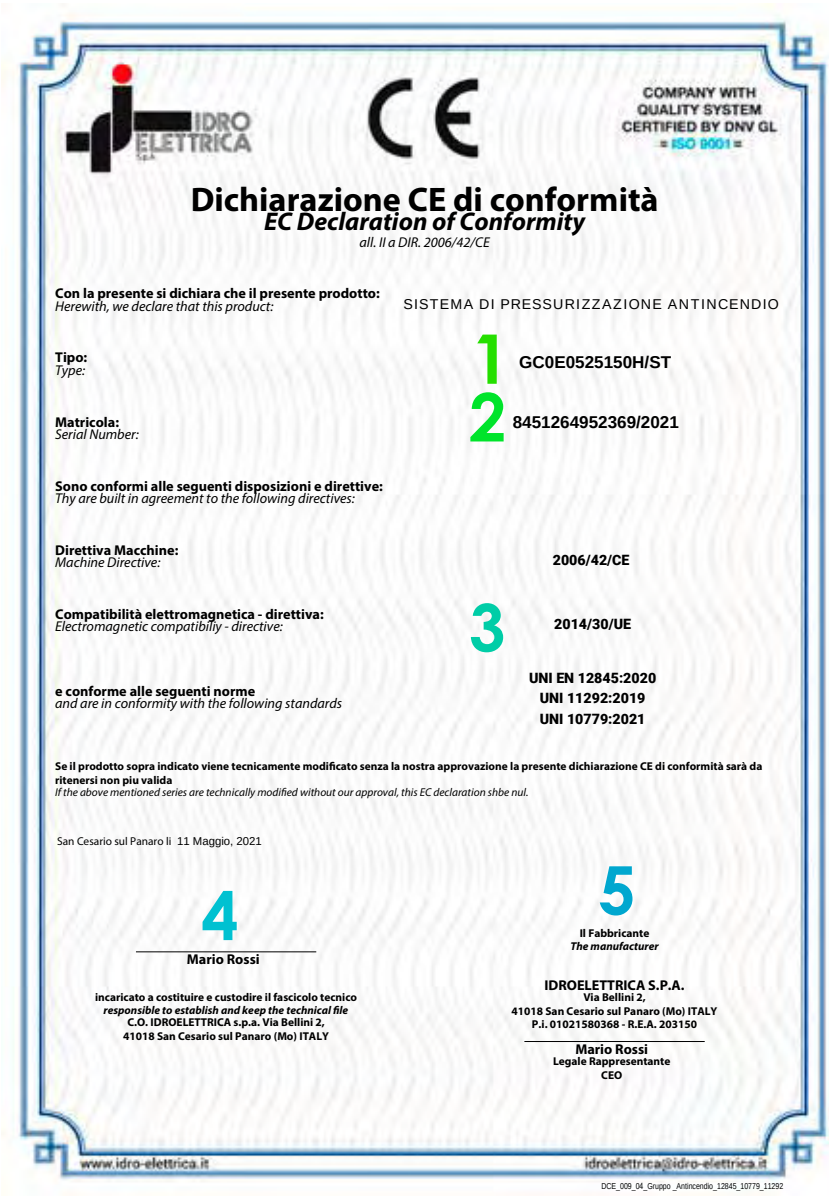

IDRO ELETTRICA S.p.A.

CE

COMPANY WITH QUALITY SYSTEM CERTIFIED BY DNV GL = ISO 9001 =

Dichiarazione CE di conformità
EC Declaration of Conformity
all. II a DIR. 2006/42/CE

Con la presente si dichiara che il presente prodotto:
Herewith, we declare that this product: SISTEMA DI PRESSURIZZAZIONE ANTINCENDIO

Tipo:
Type: 1 **GC0E0525150H/ST**

Matricola:
Serial Number: 2 **8451264952369/2021**

Sono conformi alle seguenti disposizioni e direttive:
Thy are built in agreement to the following directives:

Direttiva Macchine:
Machine Directive: **2006/42/CE**

Compatibilità elettromagnetica - direttiva:
Electromagnetic compatibilly - directive: 3 **2014/30/UE**

e conforme alle seguenti norme
and are in conformity with the following standards
UNI EN 12845:2020
UNI 11292:2019
UNI 10779:2021

Se il prodotto sopra indicato viene tecnicamente modificato senza la nostra approvazione la presente dichiarazione CE di conformità sarà da ritenersi non piu valida
If the above mentioned series are technically modified without our approval, this EC declaration shbe nul.

San Cesario sul Panaro li 11 Maggio, 2021

4
Mario Rossi

incaricato a costituire e custodire il fascicolo tecnico
responsible to establish and keep the technical file
C.O. IDROELETTRICA s.p.a. Via Bellini 2,
41018 San Cesario sul Panaro (Mo) ITALY

5
Il Fabbricante
The manufacturer

IDROELETTRICA S.P.A.
Via Bellini 2,
41018 San Cesario sul Panaro (Mo) ITALY
P.I. 01021580368 - R.E.A. 203150

Mario Rossi
Legale Rappresentante
CEO

www.idro-elettrica.it idroelettrica@idro-elettrica.it

DCE_009_04_Gruppo _Antincendio_12845_10779_11292

The technical data are not binding and can be modified without prior notice | The images are indicative and not binding

EUROFIRE
modular firefighting•pumpset

FIREBOX®
modular firefighting•system

FIREBLOCK
modular firefighting•system complete of water storage

EXAMPLES OF INSTALLATION

MAIN HYDRAULIC PUMPS SELECTION

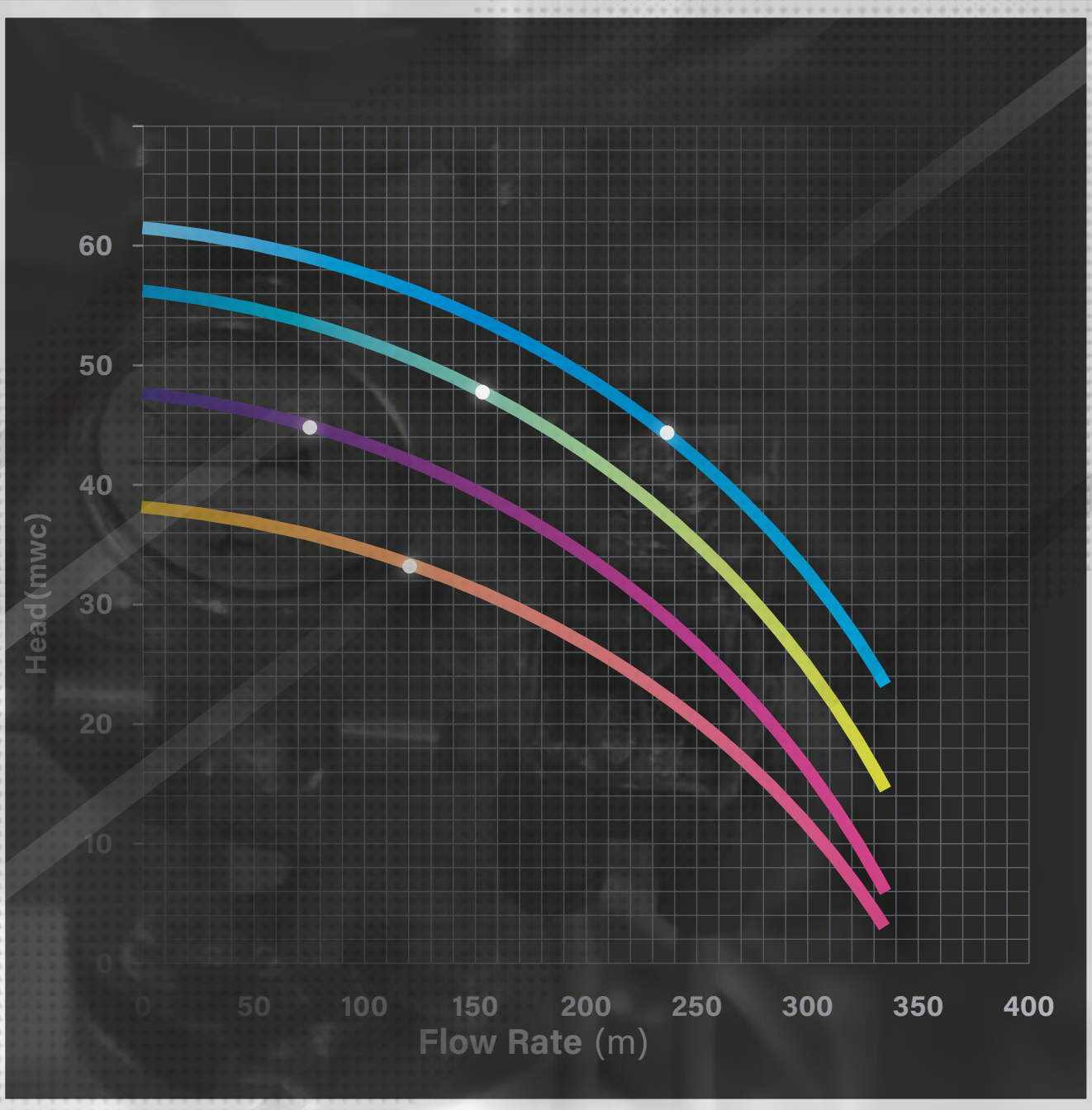

HORIZONTAL CENTRIFUGAL PUMPS PAGE 24

VERTICAL CENTRIFUGAL PUMPS PAGE 32

SUBMERSIBLE ELECTRIC PUMPS PAGE 37

HORIZONTAL CENTRIFUGAL PUMPS

END SUCTION normalised single-impeller centrifuge with **BACK PULL OUT** horizontal shaft, with a spiral diffuser and separate support; axial intake and radial delivery; pump-motor connection by means of a spacer flexible coupling complete with a safety guard UNI EN 12845 10.1

Pump:

- Pump body and impeller — in EN GJL 250 cast iron
- Shaft — in AISI 431 stainless steel
- Mechanical seal — ceramic-graphite

32-160

Units with Electric pump on page 48 | Units with Motor pump on page 98

Pump Model	Pump ID	Motor		Pump Fittings			Flow Rate - m³/h						
		Electrical	Diesel	Intake	Delivery								
		kW	kW	Ø	Ø		0	5	10	15	20	25	30
32-160/1	010	3	6.2	50	32	H	29.5	29.3	29.2	29.0	28.0	25.8	

32-200

Units with Electric pump on page 50 | Units with Motor pump on page 100

Pump Model	Pump ID	Motor		Pump Fittings			Flow Rate - m³/h						
		Electrical	Diesel	Intake	Delivery								
		kW	kW	Ø	Ø		0	5	10	15	20	25	30
32-200/14	020	4	6.2	50	32	H (mwc)	40.5	39	37	34.5	30	24	
32-200/2	025	5.5	6.2	50	32		50	48	46	43	40	37	
32-200/3	026	5.5	6.2	50	32		53	53	51	49	44.5		
32-200/4	027	5.5	6.2	50	32		56	56	54.5	51.5	46.5		
32-200/5	028	7.5	6.2	50	32		54	50.5	48	44.5	41	36	
32-200/8	030	7.5	7	50	32		61	61	60	58	53		
32-200/9	032	7.5	7	50	32		58.5	57.5	56	53	48	43	

32-250

Units with Electric pump on page 52 | Units with Motor pump on page 102

Pump Model	Pump ID	Motor		Pump Fittings			Flow Rate - m³/h											
		Electrical	Diesel	Intake	Delivery													
		kW	kW	Ø	Ø		0	5	10	15	20	25	30	35	40	45	50	55
32-250/3	035	11	12.8	50	32	H (mwc)	91	91	89	84	69							
32-250/13	036	15	17.5	50	32		77.5	77	76.5	76	76	74	70					
32-250/5	037	15	17.5	50	32		61	61	61	60.5	60	59	57.5	56	54	52	49	
32-250/7	040	18.5	17.5	50	32		66	66	66	66	65.5	65.5	65	64	62	59.5	56.5	
32-250/11	045	18.5	17.5	50	32		89.5	89.5	89.5	89.5	89	87	83	77				
32-250/8	052	18.5	25.2	50	32		70	70	70	69.5	69	68	67	65.5	64	62	60	
32-250/10	047	18.5	25.2	50	32		96	96	95.5	95	94.5	92	89	83				
32-250/9	050	22	25.2	50	32		78	78	78	78	77	76	75	73.5	72	70	67	
32-250/12	055	30	25.2	50	32		96	95.5	95	94.5	94	93	92	91	89.5	88	85	

Jockey pumps available from page 39

Note:
The data on the left of the reference refer to the maximum delivery speed allowed of 6 m/sec.
The data highlighted in red refer to speeds exceeding 6 m/sec. The data on a grey background highlight NPSH-R values > 5m.
For installations in HHS-HHP systems, contact our technical department.
Nominal hydraulic characteristics of flow rate and head at the pump inlet, with performance tolerances according to UNI EN ISO 9906:2012 Grade 3B

HORIZONTAL CENTRIFUGAL PUMPS

END SUCTION normalised single-impeller centrifuge with **BACK PULL OUT** horizontal shaft, with a spiral diffuser and separate support; axial intake and radial delivery; pump-motor connection by means of a spacer flexible coupling complete with a safety guard UNI EN 12845 10.1

Pump:

- Pump body and impeller — in EN GJL 250 cast iron
- Shaft — in AISI 431 stainless steel
- Mechanical seal — ceramic-graphite

40-200

Units with Electric pump on page 54 | Units with Motor pump on page 104

Pump Model	Pump ID	Motor		Pump Fittings			Flow Rate - m³/h													
		Electrical	Diesel	Intake	Delivery															
		kW	kW	Ø	Ø		0	5	10	15	20	25	30	35	40	45	50	55	60	65
40-200/5	090	5.5	6.2	65	40	H (mwc)	34.5	34	34	33.5	33	32	31	29	26	21	11			
40-200/1	100	7.5	6.2	65	40		43	42	41.5	41	39.5	37.5	35	30	23.5					
40-200/2	103	7.5	7	65	40		47.5	47.5	47	46	45	43	40	36	31					
40-200/3	105	11	10.5	65	40		65	65	64.5	64	63	61.5	59	55	49.5					
40-200/4	110	11	10.5	65	40		58	57.5	57	56.5	56	55	54	52.5	50.5	48	45			
40-200/6	115	15	12.8	65	40		63	63	63	63	62.5	61.5	60	58	55.5	52	48			
40-200/7	116	15	17.5	65	40		66	66	66	66	66	65.5	65	64	62	60	58	55	52	49

40-250

Units with Electric pump on page 56 | Units with Motor pump on page 106

Pump Model	Pump ID	Motor		Pump Fittings			Flow Rate - m³/h													
		Electrical	Diesel	Intake	Delivery															
		kW	kW	Ø	Ø		0	5	10	15	20	25	30	35	40	45	50	55	60	65
40-250/5	140	15	17.5	65	40	H (mwc)	69	68.5	68	67	66	64.5	62	60	57.5	55				
40-250/6	145	18.5	17.5	65	40		80	80	80	80	80	80	80	79	78	76	74	71	60	
40-250/7	150	18.5	17.5	65	40		75	74.5	74	73	71.5	70	67.5	65	62.5	59.5				
40-250/9	160	18.5	25.2	65	40		79	78.5	78	77	75.5	74	72	70	68	65	62			
40-250/10	165	22	25.2	65	40		92	91	90	89	88	86.5	85	83	81	78	74			
40-250/12	170	22	25.2	65	40		90	90	89.7	89.5	89	88.5	87.5	86	84	81	77.5	72	66	
40-250/13	180	30	25.2	65	40		97	96.5	96	95.5	95	94	92	90	87	83	79	74		

40-315

Units with Electric pump on page 58 | Units with Motor pump on page 108

Pump Model	Pump ID	Motor		Pump Fittings			Flow Rate - m³/h										
		Electrical	Diesel	Intake	Delivery												
		kW	kW	Ø	Ø		0	5	10	15	20	25	30	35	40	45	50
40-315/1	181	22	25.2	65	40	H (mwc)	105	104.5	104	103	101	98	93.5	85	72		
40-315/2	182	30	25.2	65	40		121	120.5	120	119	117.5	115.5	111.5	105	98	88	
40-315/3	184	30	36.5	65	40		128	127.5	127	126	125	123.5	120.5	116	109	99	
40-315/4	183	37	36.5	65	40		132	132	131.5	131	130	129	126	122	115	106.5	
40-315/5	186	37	36.5	65	40		149	148.5	148	147.5	146.5	145.5	144	141	136	130	
40-315/6	185	55	66	65	40		126	126.5	127	127.5	128	128.5	129	129	129	129	

Jockey pumps available from page 39

Note:
The data on the left of the reference refer to the maximum delivery speed allowed of 6 m/sec.
The data highlighted in red refer to speeds exceeding 6 m/sec. The data on a grey background highlight NPSH-R values > 5m.
For installations in HHS-HHP systems, contact our technical department.
Nominal hydraulic characteristics of flow rate and head at the pump inlet, with performance tolerances according to UNI EN ISO 9906:2012 Grade 3B

Fire-fighting units catalogue - Edition: September-2021

HORIZONTAL CENTRIFUGAL PUMPS

END SUCTION normalised single-impeller centrifuge with **BACK PULL OUT** horizontal shaft, with a spiral diffuser and separate support; axial intake and radial delivery; pump-motor connection by means of a spacer flexible coupling complete with a safety guard UNI EN 12845 10.1

Pump:

- Pump body and impeller — in EN GJL 250 cast iron
- Shaft — in AISI 431 stainless steel
- Mechanical seal — ceramic-graphite

50-160

Units with Electric pump on page 60 | Units with Motor pump on page 110

Pump Model	Pump ID	Motor		Pump Fittings			Flow Rate - m³/h									
		Electrical	Diesel	Intake	Delivery											
		kW	kW	Ø	Ø		0	10	20	30	40	50	60	70	80	90
50-160/1	192	7.5	7	65	50	H (mwc)	33	33	33	32.5	32	30.5	28	25		
50-160/2	194	11	10.5	65	50		42	42	41.5	41	40	38	36	33.5	30.5	

50-200

Units with Electric pump on page 62 | Units with Motor pump on page 112

Pump Model	Pump ID	Motor		Pump Fittings			Flow Rate - m³/h										
		Electrical	Diesel	Intake	Delivery												
		kW	kW	Ø	Ø		0	10	20	30	40	50	60	70	80	90	100
50-200/1	200	11	10.5	65	50	H (mwc)	45	45	44.5	43.5	42.5	40	35				
50-200/2	205	15	12.8	65	50		51	51	50.5	50	48.5	45	40.5	33.5			
50-200/3	210	15	17.5	65	50		58	58	58	58	56	53	50				
50-200/6	215	18.5	17.5	65	50		61	61	60.5	59	57.5	55.5	53	49.5			
50-200/4	220	22	25.2	65	50		67.5	67.5	67	66	64.5	62.5	60.5	58	54		
50-200/5	230	22	25.2	65	50		70	70	70	70	70	70	69	66.5	63	59	

50-250

Units with Electric pump on page 64 | Units with Motor pump on page 114

Pump Model	Pump ID	Motor		Pump Fittings			Flow Rate - m³/h										
		Electrical	Diesel	Intake	Delivery												
		kW	kW	Ø	Ø		0	10	20	30	40	50	60	70	80	90	100
50-250/8	240	18.5	25.2	65	50	H (mwc)	68.5	68	67.5	66	63	58					
50-250/3	250	22	25.2	65	50		77	76.5	75.5	74	72	70	67.5	64			
50-250/9	255	22	25.2	65	50		78	77.5	76.5	75	72	68	62				
50-250/5	242	30	25.2	65	50		89	88	87	86.5	85	83	80	76	70.5		
50-250/11	243	30	25.2	65	50		87	86.5	86	85.5	85	83.5	80	76	72	70	
50-250/6	260	30	25.2	65	50		94.5	94	93.5	93	91.5	88.5	84	76			
50-250/13	267	30	25.2	65	50		72	72	72	72	72	72	72	68	66	62	
50-250/7	270	30	36.5	65	50		98	97.5	97	95.5	94	92.5	90	86.5	81		
50-250/10	265	30	36.5	65	50		99	98.7	98.5	96.7	95	92	86	80			
50-250/12	266	37	36.5	65	50		94	94	94	94	94	94	93	92	90	86	

Jockey pumps available from page 39

Note:
The data on the left of the reference refer to the maximum delivery speed allowed of 6 m/sec.
The data highlighted in red refer to speeds exceeding 6 m/sec. The data on a grey background highlight NPSH-R values > 5m.
For installations in HHS-HHP systems, contact our technical department.
Nominal hydraulic characteristics of flow rate and head at the pump inlet, with performance tolerances according to UNI EN ISO 9906:2012 Grade 3B

Fire-fighting units catalogue - Edition: September-2021

The technical data are not binding and can be modified without prior notice | The images are indicative and not binding

HORIZONTAL CENTRIFUGAL PUMPS

END SUCTION normalised single-impeller centrifuge with **BACK PULL OUT** horizontal shaft, with a spiral diffuser and separate support; axial intake and radial delivery; pump-motor connection by means of a spacer flexible coupling complete with a safety guard UNI EN 12845 10.1

Pump:

- Pump body and impeller — in EN GJL 250 cast iron
- Shaft — in AISI 431 stainless steel
- Mechanical seal — ceramic-graphite

50-315

Units with Electric pump on page 66 | Units with Motor pump on page 116

Pump Model	Pump ID	Motor		Pump Fittings			Flow Rate - m³/h											
		Electrical	Diesel	Intake	Delivery													
		kW	kW	Ø	Ø		0	10	20	30	40	50	60	70	80	90	100	110
50-315/2	269	45	47.7	80	50	H (mwc)	104	103.5	103	102.5	101.5	100	97.5	94	90	85	80	
50-315/3	273	45	47.7	65	50		121	121	120.5	120	119	118	116	113	110	106	100	90
50-315/5	271	55	47.7	65	50		126	125.5	125	124.5	123.5	122	120.5	118	115	111	105	97.5
50-315/6	277	55	66	80	50		120	119.5	119	118	116	114	111	108	104	100	95.5	
50-315/7	272	55	66	65	50		136	136	135.5	135	134	133.5	132.5	130	127	123	118	112
50-315/8	275	75	66	80	50		131	131	130.5	130	129	127	124.5	121	117.5	113	108	
50-315/9	278	75	66	65	50		153	153	152.5	152	151.5	151	150	148	145	142	138	132

Jockey pumps available from page 39

Note:
The data on the left of the reference refer to the maximum delivery speed allowed of 6 m/sec.
The data highlighted in red refer to speeds exceeding 6 m/sec. The data on a grey background highlight NPSH-R values > 5m.
For installations in HHS-HHP systems, contact our technical department.
Nominal hydraulic characteristics of flow rate and head at the pump inlet, with performance tolerances according to UNI EN ISO 9906:2012 Grade 3B

The technical data are not binding and can be modified without prior notice | The images are indicative and not binding

HORIZONTAL CENTRIFUGAL PUMPS

END SUCTION normalised single-impeller centrifuge with **BACK PULL OUT** horizontal shaft, with a spiral diffuser and separate support; axial intake and radial delivery; pump-motor connection by means of a spacer flexible coupling complete with a safety guard UNI EN 12845 10.1

Pump:

- Pump body and impeller — in EN GJL 250 cast iron
- Shaft — in AISI 431 stainless steel
- Mechanical seal — ceramic-graphite

65-200

Units with Electric pump on page 68 | Units with Motor pump on page 118

Pump Model	Pump ID	Motor		Pump Fittings			Flow Rate - m³/h								
		Electrical	Diesel	Intake	Delivery										
		kW	kW	Ø	Ø		0	20	40	60	80	100	120	140	160
65-200/1	283	15	17.5	80	65	H (mwc)	42.5	42.5	42.5	41	38.5	34	28		
65-200/9	274	18.5	17.5	80	65		43	43.5	44	43.5	41				
65-200/10	280	22	25.2	80	65		49	49.5	50	49.5	48				
65-200/13	284	30	25.2	80	65		48	48	48	48	46	42	37.5	35.5	
65-200/11	290	30	25.2	80	65		62.5	63.5	64	64	61.5	57.5	51.5		
65-200/6	296	30	25.2	80	65		54.5	54	53.5	53	51	48.5	44.5		
65-200/8	295	30	36.5	80	65		60	59.5	59.5	59	57	54.5	51	47	
65-200/12	300	30	36.5	80	65		65	66	67	66.5	64	60.5	55.5		
65-200/5	285	37	36.5	80	65		68	68.5	69	69	68.5	67.5	65	61	

65-250

Units with Electric pump on page 70 | Units with Motor pump on page 120

Pump Model	Pump ID	Motor		Pump Fittings			Flow Rate - m³/h								
		Electrical	Diesel	Intake	Delivery										
		kW	kW	Ø	Ø		0	20	40	60	80	100	120	140	160
65-250/13	267	30	25.2	80	65	H (mwc)	57	59	60	58	56	52	46		
65-250/6	320	30	36.5	80	65		70	71	71.5	70	67	62.5			
65-250/12	325	37	36.5	80	65		73	74	73	72	70	66			
65-250/3	335	37	36.5	80	65		75	74.5	74.5	74	73	70	65	58.5	
65-250/7	330	37	36.5	80	65		82	82	81.5	80	77.5	73.5			
65-250/4	352	45	47.7	80	65		95	95	95	95	94	92.5	87	81	
65-250/8	340	45	47.7	80	65		92	92	92	91	88.5	85			
65-250/9	345	45	47.7	80	65		84	83.5	83	82	81	79	76	71	
65-250/10	350	55	47.7	80	65		95	95.5	96	94.5	92	83			
65-250/14	326	55	66	80	65		100	100	100	99.5	98	97	93	87.5	
65-250/11	348	55	66	80	65		98	99	99.5	98	95	91			

65-315

Units with Electric pump on page 72 | Units with Motor pump on page 122

Pump Model	Pump ID	Motor		Pump Fittings			Flow Rate - m³/h											
		Electrical	Diesel	Intake	Delivery													
		kW	kW	Ø	Ø		0	20	40	60	80	100	120	140	160	180	200	220
65-315/1	353	55	66	80	65	H (mwc)	105	104.5	104	103	101	98	93	85	74			
65-315/2	356	75	66	80	65		118	118	117	116	114	110	106	100	92			
65-315/3	354	90	102	80	65		143	143	142.5	142	141	140	136.5	132	126			
65-315/7	355	75	102	80	65		128	127.5	127	126	124	122	120	114	108	97	72	

Note:
The data to the left of the reference refer to the maximum allowed delivery speed of 6 m/sec. The data highlighted in red entail speeds higher than 6 m/sec. The data on a grey background highlight NPSH-R > 5m values.
For installations in HHS-HHP systems, contact our technical department.
Nominal hydraulic characteristics of flow rate and head at the pump inlet, with performance tolerances according to UNI EN ISO 9906:2012 Grade 3B

HORIZONTAL CENTRIFUGAL PUMPS

END SUCTION normalised single-impeller centrifuge with **BACK PULL OUT** horizontal shaft, with a spiral diffuser and separate support; axial intake and radial delivery; pump-motor connection by means of a spacer flexible coupling complete with a safety guard UNI EN 12845 10.1

Pump:

- Pump body and impeller — in EN GJL 250 cast iron
- Shaft — in AISI 431 stainless steel
- Mechanical seal — ceramic-graphite

80-200

Units with Electric pump on page 74 | Units with Motor pump on page 124

Pump Model	Pump ID	Motor		Pump Fittings			Flow Rate - m³/h										
		Electrical	Diesel	Intake	Delivery												
		kW	kW	Ø	Ø		0	50	80	100	120	140	160	180	200	220	240
80-200/1	358	22	25.2	100	80	H (mwc)	40	40	39.5	39	38	36.5	34.5	31.5	27.5	23.5	
80-200/10	362	30	25.2	100	80		50	49	47.5	46.5	45	43	41	39	36	31.5	
80-200/3	357	30	36.5	100	80		51	51	50	49	48	47	45	42.5	39	35.5	
80-200/8	367	30	36.5	100	80		53	52.5	51	50	49	47	45	43	40		
80-200/6	360	37	36.5	100	80		57.5	57	56.5	55.5	54	52	50	48	45		
80-200/7	365	45	47.7	100	80		63	63.5	63	63	61.5	60	58	56	53.5		
80-200/9	370	45	47.7	100	80		64	63.5	63	62.5	62	60.5	59	57	55		

80-250

Units with Electric pump on page 76 | Units with Motor pump on page 126

Pump Model	Pump ID	Motor		Pump Fittings			Flow Rate - m³/h											
		Electrical	Diesel	Intake	Delivery													
		kW	kW	Ø	Ø		0	50	80	100	120	140	160	180	200	220	240	260
80-250/2	371	45	47.7	100	80	H (mwc)	76.5	77	76	75	73	71	68	64	60			
80-250/3	376	55	47.7	100	80		80	80	79	78.5	77	75	72	68	64			
80-250/10	372	55	47.7	100	80		73	73	72.5	72	71	69	66.5	63	59			
80-250/4	373	55	66	100	80		85	85	84	83	82	80	77	74	70			
80-250/11	380	55	66	100	80		80	79.5	78	77.5	76	75	73	70	66	61	52.5	
80-250/5	385	75	66	100	80		81.5	82	82	81	80	79	77.5	76	74	71	67	63
80-250/6	384	75	66	100	80		96	96	96	95	94	92	90	87	84	80		
80-250/12	392	75	66	100	80		89	88.5	87	86.5	85.5	84.5	83	80	77	73	68	
80-250/7	386	75	108	100	80		89	89	89	88.5	88	87	85.5	84	82	79.5	76.5	73
80-250/8	394	75	108	100	80		102	102	101	100.5	100	98.5	96	94	91	87		
80-250/9	396	90	108	100	80		104	104	103	102.5	102	101.5	100	99	97	95	92	89

80-315

Units with Electric pump on page 78 | Units with Motor pump on page 128

Pump Model	Pump ID	Motor		Pump Fittings			Flow Rate - m³/h											
		Electrical	Diesel	Intake	Delivery													
		kW	kW	Ø	Ø		0	50	80	100	120	140	160	180	200	220	240	260
80-315/3	403	110	108	100	80	H (mwc)	129	128	127	126	125	123	121	118	115	111	107	103
80-315/4	406	132	149	100	80		147	146.5	145.5	145	143.5	142	140	137.5	135	132	129.5	126

Jockey pumps available from page 39

Note:
The data on the left of the reference refer to the maximum delivery speed allowed of 6 m/sec.
The data highlighted in red refer to speeds exceeding 6 m/sec. The data on a grey background highlight NPSH-R values > 5m.
For installations in HHS-HHP systems, contact our technical department.
Nominal hydraulic characteristics of flow rate and head at the pump inlet, with performance tolerances according to UNI EN ISO 9906:2012 Grade 3B

The technical data are not binding and can be modified without prior notice | The images are indicative and not binding

HORIZONTAL CENTRIFUGAL PUMPS

END SUCTION normalised single-impeller centrifuge with **BACK PULL OUT** horizontal shaft, with a spiral diffuser and separate support; axial intake and radial delivery; pump-motor connection by means of a spacer flexible coupling complete with a safety guard UNI EN 12845 10.1

Pump:

- Pump body and impeller — in EN GJL 250 cast iron
- Shaft — in AISI 431 stainless steel
- Mechanical seal — ceramic-graphite

100-200

Units with Electric pump on page 80 | Units with Motor pump on page 130

Pump Model	Pump ID	Motor		Pump Fittings			Flow Rate - m³/h											
		Electrical	Diesel	Intake	Delivery													
		kW	kW	Ø	Ø		0	50	100	150	200	220	240	260	280	320	350	380
100-200/1	410	22	25.2	125	100	H (mwc)	33	33	32.5	30.5	27	25.5	24	22	20	15.5		
100-200/3	420	30	36.5	125	100		41	41	40	38	34.5	33	31.5	30	28	23		
100-200/5	430	37	36.5	125	100		47	47	47	45	42.5	41	39.5	37.5	35	29.5		
100-200/6	435	45	47.7	125	100		53	53	52.5	51	49	48.5	47	45.5	44	39.5	33	
100-200/8	440	55	66	125	100		62	62	62	61	59	58	57	55.5	54	51	47	

100-250

Units with Electric pump on page 82 | Units with Motor pump on page 132

Pump Model	Pump ID	Motor		Pump Fittings			Flow Rate - m³/h											
		Electrical	Diesel	Intake	Delivery													
		kW	kW	Ø	Ø		0	50	100	150	200	220	240	260	280	320	360	400
100-250/3	450	55	66	125	100	H (mwc)	69	69	67.5	65.5	62.5	61	59	56	53	47	40	30
100-250/5	460	75	66	125	100		75	75	74	72.5	69.5	67.5	65	62.5	60	54	47	39
100-250/7	471	75	108	125	100		80	80	79	77	74.5	73	70.5	68.5	66	60.5	53	46
100-250/9	476	90	108	125	100		89.5	89	87	85	82.5	81	79.5	77.5	75	69.5	63.5	56
100-250/11	481	110	108	125	100		95	94.5	93	90.5	88	86.5	85	83.5	81.5	77.5	72	63
100-250/14	479	110	108	125	100		99	98.5	97	95.5	93	92	90.5	89	87	83	77.5	70

100-315

Units with Electric pump on page 84 | Units with Motor pump on page 134

Pump Model	Pump ID	Motor		Pump Fittings			Flow Rate - m³/h											
		Electrical	Diesel	Intake	Delivery													
		kW	kW	Ø	Ø		0	50	100	150	200	220	240	260	280	320	340	360
100-315/1	513	90	108	125	100	H (mwc)	104	103	101	99	94	90	86	81	74			
100-315/11	491	110	108	125	100		114	114	113.5	111	105.5	102	97	91	82.5			
100-315/2	492	110	108	125	100		116	115.5	114.5	112.5	108.5	106	103	99	94	79		
100-315/4	482	132	149	125	100		131	130.5	130	128.5	125.5	123.5	121	118	112.5	100	93	
100-315/6	486	160	149	125	100		138.5	138	137	136	134	132.5	130.5	128	124.5	113	105	
100-315/8	483	160	177	125	100		146	145.5	145	144	142.5	141.5	140	137	133	122	115	
100-315/9	488	200	202	125	100		152	152	150	148	145	143	141	139	137	132	129	
100-315/10	484	200	202	125	100		159	159	159	159	158.5	157	156	154	151	144	138	132

Jockey pumps available from page 39

Note:
The data on the left of the reference refer to the maximum delivery speed allowed of 6 m/sec.
The data highlighted in red refer to speeds exceeding 6 m/sec. The data on a grey background highlight NPSH-R values > 5m.
For installations in HHS-HHP systems, contact our technical department.
Nominal hydraulic characteristics of flow rate and head at the pump inlet, with performance tolerances according to UNI EN ISO 9906:2012 Grade 3B

HORIZONTAL CENTRIFUGAL PUMPS

END SUCTION normalised single-impeller centrifuge with **BACK PULL OUT** horizontal shaft, with a spiral diffuser and separate support; axial intake and radial delivery; pump-motor connection by means of a spacer flexible coupling complete with a safety guard UNI EN 12845 10.1

Pump:

- Pump body and impeller — in EN GJL 250 cast iron
- Shaft — in AISI 431 stainless steel
- Mechanical seal — ceramic-graphite

125-250

Units with Electric pump on page 86 | Units with Motor pump on page 136

Pump Model	Pump ID	Motor		Pump Fittings			Flow Rate - m³/h											
		Electrical	Diesel	Intake	Delivery													
		kW	kW	Ø	Ø		0	100	200	240	280	320	340	360	380	400	440	480
125-250/1	485	75	108	150	125	H (mwc)	63	63	62.5	61.5	60	57.5	55.5	53.5	51	48.5		
125-250/2	502	90	108	150	125		74	74	74	73.5	71	68	66.5	65	63	61	57	
125-250/12	501	90	108	150	125		71.5	71	69	68.5	67	65	64	63	62	60	57	55
125-250/3	503	110	108	150	125		80	80	79.5	78.5	77	74.5	73	72	70	68	64	
125-250/5	515	132	149	150	125		91	91	90.5	89.5	88	86.5	85	84	82.5	81	77	72.5
125-250/7	510	132	149	150	125		84	84	83	82	81	80	79	78.5	77.5	76.5		
125-250/13	516	160	149	150	125		88	90	92	92	91.5	91	90.5	90	89	88	86	85
125-250/8	520	160	149	150	125		98	98	98	97.8	97.5	97	96.5	96	95.5	95	88	87
125-250/6	525	160	149	150	125		102	102	102	101.5	100	98.5	98	97	96	95	92	

125-315

Units with Electric pump on page 88 | Units with Motor pump on page 138

Pump Model	Pump ID	Motor		Pump Fittings			Flow Rate - m³/h											
		Electrical	Diesel	Intake	Delivery													
		kW	kW	Ø	Ø		0	100	150	200	250	300	350	400	450	500	550	600
125-315/1	530	160	177	150	125	H (mwc)	109	109	109	108	105.5	102	98	94	88			
125-315/3	489	200	202	150	125		121	120	119	118	116	113	110	105	100			
125-315/5	491	200	202	150	125		123	123	122.5	122	121	119	116	113	108	103	97	92
125-315/4	537	250	222	150	125		131	131	130	129	128	126	124	121	116	112		

150-315

Units with Electric pump on page 90 | Units with Motor pump on page 140

Pump Model	Pump ID	Motor		Pump Fittings			Flow Rate - m³/h											
		Electrical	Diesel	Intake	Delivery													
		kW	kW	Ø	Ø		0	200	250	300	350	400	450	500	550	600	700	800
150-315/1	540	200	202	200	150	H	95	95	95	94.5	94	92.5	90.5	88	85	82	75	
150-315/6	545	250	222	200	150		100	103	103	103	102	100	97.5	95	92.5	90	82	73

150-500 1760 RPM

Units with Motor pump on page 142

Pump Model	Pump ID	Motor		Pump Fittings			Flow Rate - m³/h											
		Electrical	Diesel	Intake	Delivery													
		kW	kW	Ø	Ø		0	200	240	320	360	400	440	520	560	600	720	800
150-500/2	600	250	255	200	150	H	115	112	111	109.5	108	107	106	103	101.5	100	94	88

Jockey pumps available from page 39

Note:
The data on the left of the reference refer to the maximum delivery speed allowed of 6 m/sec.
The data highlighted in red refer to speeds exceeding 6 m/sec. The data on a grey background highlight NPSH-R values > 5m.
For installations in HHS-HHP systems, contact our technical department.
Nominal hydraulic characteristics of flow rate and head at the pump inlet, with performance tolerances according to UNI EN ISO 9906:2012 Grade 3B

The technical data are not binding and can be modified without prior notice | The images are indicative and not binding

VTP PUMPS - VERTICAL TURBINE PUMPS

Submersible axial flow vertical shaft pump, pump body connected to the control unit through the line shaft, fitted with an anti-rotation device to prevent machine counter-rotation when emptying the line shaft.

Pump:

- Control unit / Pump body / Impellers / Diffusers — made of grey cast iron
- Shaft / Transmission sleeve / Tapered bush — in stainless steel

Line shaft:

- Rod support — made of grey cast iron
- Transmission rod / Pipe — in steel

Note: Line shaft up to a maximum length of 4 m (longer lengths on request)
Diesel engine and control unit connected by a cardan joint

VTP 60E DN 80

Units with Electric pump on page 150 | Units with Motor pump on page 174

Pump Model	ID Pump	Motor		Submersion		Flow Rate - m³/h					
		Electrical	Diesel								
		kW	kW	mm		0	10	20	30	40	50
VTP 60E/3A	021	5.5	6.2	370	H (mwc)	40	40	38	35	28	17
VTP 60E/4B	022	5.5	6.2	370		47	46	45	40	30	15
VTP 60E/4A	023	7.5	6.2	370		54	53	51	47	38	22
VTP 60E/5B	030	7.5	7	370		59	58	56	50	38	19
VTP 60E/5A	035	11	10.5	370		67	67	64	59	47	28
VTP 60E/6B	040	7.5	10.5	370		71	70	67	60	45	22
VTP 60E/6A	045	11	10.5	370		80	80	77	70	56	34
VTP 60E/7A	047	11	10.5	370		94	93	90	82	66	39
VTP 60E/8B	048	11	10.5	370		94	93	90	80	60	30
VTP 60E/9B	055	15	12.8	370		106	104	101	90	68	33
VTP 60E/8A	060	15	12.8	370		107	106	102	94	75	45
VTP 60E/10B	065	15	12.8	370		118	116	112	100	76	37
VTP 60E/9A	068	15	17.5	370		121	120	115	105	85	50
VTP 60E/10A	070	15	17.5	370		134	133	128	117	94	56
VTP 60E/11A	080	18.5	17.5	370		147	146	141	129	103	62

Fire-fighting units catalogue - Edition: September-2021

Jockey pumps available from page 39

Note:
Values with a GREY background indicate NPSH-R values > 8m. For installations in HHS-HHP systems, contact our technical department. Nominal hydraulic characteristics of flow rate and head at the pump inlet, with performance tolerances according to UNI EN ISO 9906:2012 Grade 3B

The technical data are not binding and can be modified without prior notice | The images are indicative and not binding

VTP PUMPS - VERTICAL TURBINE PUMPS

Submersible axial flow vertical shaft pump, pump body connected to the control unit through the line shaft, fitted with an anti-rotation device to prevent machine counter-rotation when emptying the line shaft.

Pump:

- Control unit / Pump body / Impellers / Diffusers — made of grey cast iron
- Shaft / Transmission sleeve / Tapered bush — in stainless steel

Line shaft:

- Rod support — made of grey cast iron
- Transmission rod / Pipe — in steel

Note: Line shaft up to a maximum length of 4 m (longer lengths on request)
Diesel engine and control unit connected by a cardan joint

VTP 60F DN 80

Units with Electric pump on page 152 | Units with Motor pump on page 176

Pump Model	ID Pump	Motor		Submersion		Flow Rate - m³/h							
		Electrical	Diesel										
		kW	kW	mm		0	10	20	30	40	50	60	65
VTP 60F/3B	082	7.5	6.2	370	H (mwc)	42	41	39	38	34	28	20	16
VTP 60F/3A	083	7.5	7	370		47	45	44	42	40	35	27	23
VTP 60F/4B	084	7.5	10.5	370		56	54	53	50	45	37	26	21
VTP 60F/4A	085	11	10.5	370		62	61	58	56	53	46	36	31
VTP 60F/5B	087	11	10.5	370		70	68	66	63	56	46	33	26
VTP 60F/5A	090	15	12.8	370		78	76	73	70	66	58	46	39
VTP 60F/6B	092	11	12.8	370		83	81	79	75	67	56	39	31
VTP 60F/6A	095	15	17.5	370		94	91	88	84	80	70	55	46
VTP 60F/8B	100	15	17.5	370		111	108	105	100	90	74	52	42
VTP 60F/9B	105	18.5	17.5	370		125	122	118	113	101	83	59	47
VTP 60F/10B	110	18.5	25.2	370		139	136	132	125	112	93	66	52
VTP 60F/9A	120	22	25.2	370		140	136	131	126	119	104	82	69
VTP 60F/11B	121	22	25.2	370		153	149	145	138	123	102	72	57

VTP 60G DN 80

Units with Electric pump on page 154 | Units with Motor pump on page 178

Pump Model	ID Pump	Motor		Submersion		Flow Rate - m³/h						
		Electrical	Diesel									
		kW	kW	mm		0	20	40	50	60	70	80
VTP 60G/3A	123	7.5	6.2	370	H (mwc)	41	37	35	32	28	21	14
VTP 60G/4B	124	7.5	7	370		48	46	40	35	29	20	10
VTP 60G/4A	125	11	12.8	370		55	49	47	43	37	28	19
VTP 60G/5A	130	11	12.8	370		69	62	59	54	46	36	24
VTP 60G/6A	135	15	12.8	370		82	74	71	64	55	43	28
VTP 60G/7A	140	15	17.5	370		96	86	82	75	64	50	33
VTP 60G/8A	145	18.5	17.5	370		110	98	94	86	74	57	38
VTP 60G/9A	155	18.5	25.2	370		123	111	106	96	83	64	42
VTP 60G/10A	160	22	25.2	370		137	123	118	107	92	71	47

Jockey pumps available from page 39

Note:
Values with a GREY background indicate NPSH-R values > 8m. For installations in HHS-HHP systems, contact our technical department. Nominal hydraulic characteristics of flow rate and head at the pump inlet, with performance tolerances according to UNI EN ISO 9906:2012 Grade 3B

Fire-fighting units catalogue - Edition: September-2021

VTP PUMPS - VERTICAL TURBINE PUMPS

Submersible axial flow vertical shaft pump, pump body connected to the control unit through the line shaft, fitted with an anti-rotation device to prevent machine counter-rotation when emptying the line shaft.

Pump:

- Control unit / Pump body / Impellers / Diffusers — made of grey cast iron
- Shaft / Transmission sleeve / Tapered bush — in stainless steel

Line shaft:

- Rod support — made of grey cast iron
- Transmission rod / Pipe — in steel

Note: Line shaft up to a maximum length of 4 m (longer lengths on request)
Diesel engine and control unit connected by a cardan joint

VTP 80E DN 125

Units with Electric pump on page 156 | Units with Motor pump on page 180

Pump Model	ID Pump	Motor		Submersion		Flow Rate - m³/h							
		Electrical	Diesel										
		kW	kW	mm		0	20	40	60	70	80	90	100
VTP 80E/2B	171	11	12.8	487.5	H (mwc)	54	52	49	45	41	35	28	21
VTP 80E/3A	180	18.5	17.5	487.5		85	81	77	70	64	56	47	35
VTP 80E/3C	182	15	17.5	487.5		79	74	70	64	58	49	38	26
VTP 80E/4C	183	22	25.2	487.5		105	99	94	85	77	66	50	35
VTP 80E/4B	185	22	25.2	487.5		108	103	98	90	81	70	56	42
VTP 80E/5B	190	30	25.2	487.5		135	129	123	112	102	87	71	52
VTP 80E/5A	195	30	36.5	487.5		142	135	128	117	107	94	78	59
VTP 80E/6C	200	37	36.5	487.5		157	148	140	127	115	98	76	53
VTP 80E/6B	205	37	36.5	487.5		162	155	148	134	122	104	85	62

VTP 80F DN 125

Units with Electric pump on page 158 | Units with Motor pump on page 182

Pump Model	ID Pump	Motor		Submersion		Flow Rate - m³/h							
		Electrical	Diesel										
		kW	kW	mm		0	20	40	60	80	100	120	135
VTP 80F/2C	212	18.5	25.2	487.5	H (mwc)	53	52	51	50	47	41	33	26
VTP 80F/2A	215	22	25.2	487.5		58	56	55	53	51	46	39	30
VTP 80F/4D	230	30	36.5	487.5		96	92	87	76	67	55	40	28
VTP 80F/3C	237	30	25.2	487.5		79	78	77	74	71	61	49	38
VTP 80F/3A	238	30	36.5	487.5		87	84	82	80	76	70	58	44
VTP 80F/4C	239	37	47.7	487.5		106	104	102	99	94	82	66	51
VTP 80F/4A	240	45	47.7	487.5		116	112	110	106	102	93	78	59
VTP 80F/5B	247	55	47.7	487.5		139	138	134	129	122	111	91	73
VTP 80F/5A	248	55	47.7	487.5		145	141	137	133	127	116	97	74

Fire-fighting units catalogue - Edition: September-2021

Jockey pumps available from page 39

Note:
Values with a GREY background indicate NPSH-R values > 8m. For installations in HHS-HHP systems, contact our technical department. Nominal hydraulic characteristics of flow rate and head at the pump inlet, with performance tolerances according to UNI EN ISO 9906:2012 Grade 3B

The technical data are not binding and can be modified without prior notice | The images are indicative and not binding

VTP PUMPS - VERTICAL TURBINE PUMPS

Submersible axial flow vertical shaft pump, pump body connected to the control unit through the line shaft, fitted with an anti-rotation device to prevent machine counter-rotation when emptying the line shaft.

Pump:

- Control unit / Pump body / Impellers / Diffusers — made of grey cast iron
- Shaft / Transmission sleeve / Tapered bush — in stainless steel

Line shaft:

- Rod support — made of grey cast iron
- Transmission rod / Pipe — in steel

Note: Line shaft up to a maximum length of 4 m (longer lengths on request)
Diesel engine and control unit connected by a cardan joint

VTP 80G DN 125

Units with Electric pump on page 160 | Units with Motor pump on page 184

Pump Model	ID Pump	Motor		Submersion		Flow Rate - m³/h									
		Electrical	Diesel												
		kW	kW	mm		0	20	40	60	80	100	120	140	160	180
VTP 80G/2B	250	22	25.2	487.5	H (mwc)	52	51	50	48	46	44	40	35	30	24
VTP 80G/3D	255	50	25.2	487.5		71	69	67	65	62	58	52	46	37	30
VTP 80G/3C	257	30	25.2	487.5		77	74	72	70	67	63	58	51	43	34
VTP 80G/3A	260	37	36.5	487.5		81	79	77	74	71	68	63	56	47	38
VTP 80G/3B	265	30	36.5	487.5		79	77	74	72	70	67	62	54	46	35
VTP 80G/4B	268	37	47.7	487.5		105	102	99	96	92	87	80	70	60	47
VTP 80G/5D	285	45	47.7	487.5		119	115	112	108	103	96	87	76	61	48
VTP 80G/5B	290	55	47.7	487.5		131	128	124	120	115	109	100	88	75	59
VTP 80G/5A	295	55	47.7	487.5		135	132	128	124	119	114	105	94	79	64

VTP 90A DN 150

Units with Electric pump on page 162 | Units with Motor pump on page 186

Pump Model	ID Pump	Motor		Submersion		Flow Rate - m³/h												
		Electrical	Diesel															
		kW	kW	mm		0	90	100	108	116	126	130	144	152	162	180	198	216
VTP 90A/2B	310	30	36.5	585	H (mwc)	62	56	56	55	54	53	52	50	49	47	44	40	36
VTP 90A/2A	315	37	47.7	585		67	61	60	60	60	59	58	56	55	53	50	46	40
VTP 90A/3C	320	45	47.7	585		87	78	77	76	75	74	72	69	67	63	58	52	47
VTP 90A/3B	325	45	47.7	585		93	84	83	82	81	79	77	75	73	71	66	60	54
VTP 90A/3A	330	55	66	585		101	92	91	90	89	88	87	84	83	80	75	69	61
VTP 90A/4C	335	55	66	585		116	104	103	101	100	98	96	92	89	84	77	70	62
VTP 90A/4B	340	75	66	585		124	112	111	110	108	106	103	100	98	94	88	80	72
VTP 90A/4AB	345	75	66	585		129	117	116	115	114	111	109	107	104	100	94	86	76
VTP 90A/5BC	350	75	108	585		145	135	134	132	130	127	124	121	117	111	103	94	84
VTP 90A/5AB	355	90	108	585		154	147	145	144	142	139	137	133	130	125	118	108	96
VTP 90A/5A	360	90	108	585		168	153	151	150	149	147	145	141	138	133	125	115	101

Jockey pumps available from page 39

Note:
Values with a GREY background indicate NPSH-R values > 8m. For installations in HHS-HHP systems, contact our technical department. Nominal hydraulic characteristics of flow rate and head at the pump inlet, with performance tolerances according to UNI EN ISO 9906:2012 Grade 3B

The technical data are not binding and can be modified without prior notice | The images are indicative and not binding

VTP PUMPS - VERTICAL TURBINE PUMPS

Submersible axial flow vertical shaft pump, pump body connected to the control unit through the line shaft, fitted with an anti-rotation device to prevent machine counter-rotation when emptying the line shaft.

Pump:

- Control unit / Pump body / Impellers / Diffusers — made of grey cast iron
- Shaft / Transmission sleeve / Tapered bush — in stainless steel

Line shaft:

- Rod support — made of grey cast iron
- Transmission rod / Pipe — in steel

Note: Line shaft up to a maximum length of 4 m (longer lengths on request)
Diesel engine and control unit connected by a cardan joint

VTP 100A DN 200

Units with Electric pump on page 164 | Units with Motor pump on page 188

Pump Model	ID Pump	Motor		Submersion		Flow Rate - m³/h												
		Electrical	Diesel															
		kW	kW	mm		0	126	144	162	180	198	216	234	252	270	288	306	312
VTP 100A/2D	365	45	47.7	585	H (mwc)	71	65	64	62	60	57	54	52	48	43	40	35	33
VTP 100A/2C	370	55	66	585		76	70	68	66	64	62	60	56	52	48	44	40	38
VTP 100A/2B	375	55	66	585		82	74	73	71	69	66	64	61	57	53	48	44	43
VTP 100A/2A	380	75	66	585		86	78	76	74	73	71	68	65	62	58	53	50	48
VTP 100A/3D	385	75	66	585		107	98	96	93	89	86	81	77	71	65	59	53	50
VTP 100A/3C	390	75	108	585		114	105	102	100	96	93	89	84	78	72	66	60	58
VTP 100A/3B	395	90	108	585		124	111	109	107	104	100	96	91	85	80	72	66	65
VTP 100A/3A	400	90	108	585		130	117	114	111	109	106	102	97	92	86	80	74	72
VTP 100A/4D	405	90	108	585		142	130	128	124	119	114	108	103	95	87	79	70	66

VTP 100B DN 200

Units with Electric pump on page 166 | Units with Motor pump on page 190

Pump Model	ID Pump	Motor		Submersion		Flow Rate - m³/h												
		Electrical	Diesel															
		kW	kW	mm		0	100	150	175	200	250	275	300	325	350	375	400	450
VTP 100B/1A	406	45	47.7	585	H (mwc)	45	44	43	42	40	38	36	34	32	30	28	25	18
VTP 100B/2CD	407	55	66	585		70	68	64	62	58	53	49	44	38	33	25	19	14
VTP 100B/2BC	408	75	66	585		76	74	71	68	66	58	56	51	45	40	34	25	16
VTP 100B/2A	409	90	108	585		90	89	86	84	82	76	74	69	65	61	56	51	38
VTP 100B/3BC	410	90	108	585		117	115	109	107	102	93	87	80	73	65	58	45	20
VTP 100B/3B	415	110	108	585		118	115	111	108	105	96	88	85	76	72	62	56	30

Fire-fighting units catalogue - Edition: September-2021

Jockey pumps available from page 39

Note:
Values with a GREY background indicate NPSH-R values > 8m. For installations in HHS-HHP systems, contact our technical department. Nominal hydraulic characteristics of flow rate and head at the pump inlet, with performance tolerances according to UNI EN ISO 9906:2012 Grade 3B

The technical data are not binding and can be modified without prior notice | The images are indicative and not binding

SUBMERSIBLE ELECTRIC PUMPS

Multistage submersible electric pump with motor connection according to NEMA standard.

Electric pump:

- Outlets: AISI 304 Stainless Steel (IDF/ID6)
  Cast iron (IDS8)
- Case AISI 304 Stainless Steel
- Impeller: Noryl (IDF/ID6)
  Cast iron (IDS8)
- Diffuser Polycarbonate (IDF/ID6)
  Cast iron (IDS8)
- Shaft : AISI 304 Stainless Steel (IDF/ID6)
  AISI 431 Stainless Steel (IDS8)
- Motor submerged in an oil bath

IDF4

Units with Electric pump on page 198

Pump Model	ID Pump	Motor Electrical kW	Column Ø		Flow Rate - m³/h 0	4.8	6	7.2	8.4	9.6	10.8	12	14.4	16.8	18
IDF4-E300	405	2.2	50	H (mwc)	82	75	71	66	59	50	40	30			
IDF4-F300	410	2.2	50		83	71	67	63	58	54	48	40	20		
IDF4-G300	415	2.2	50		51	41	37	31	29	24	22	17	12		
IDF4-G400	430	3	50		70	57	52	44	41	34	32	24	18		
IDF4-G550	802	4	50		97	79	73	63	58	50	46	36	27		

ID6 F

Units with Electric pump on page 200

Pump Model	ID Pump	Motor Electrical kW	Column Ø		Flow Rate - m³/h 0	12	15	16.8	18	21	24	30	36	42	48
ID6 F/4	803	4	50	H (mwc)	61	52	49	47	46	43	38	28	14		
ID6 F/6	810	5.5	50		91	77	74	71	69	64	58	42	22		
ID6 F/8	820	7.5	50		123	105	100	96	94	86	78	56	29		

ID6 H

Units with Electric pump on page 202

Pump Model	ID Pump	Motor Electrical kW	Column Ø		Flow Rate - m³/h 0	16.8	18	21	24	30	36	42	48	54	66
ID6 H/4	821	5.5	50	H (mwc)	60	57	54	52	50	45	38	28	14		
ID6 H/5	822	7.5	50		75	70	67	65	63	57	47	35	17		
ID6 H/6	825	11	65		92	86	82	80	77	69	58	42	21		
ID6 H/8	823	11	65		122	112	109	106	102	92	77	56	28		
ID6 H/10	824	15	50		153	145	136	133	128	115	96	70	35		

ID6 L

Units with Electric pump on page 204

Pump Model	ID Pump	Motor Electrical kW	Column Ø		Flow Rate - m³/h 0	16.8	18	21	24	30	36	42	48	54	60
ID6 55/4	845	7.5	50	H (mwc)	64	61	58	56	53	51	48	45	41	37	33
ID6 L/7	842	11	50		91	85	80	76	73	71	62	52	44	37	28
ID6 L/12	844	18.5	50		156	145	140	130	125	122	105	89	76	63	48

Jockey pumps available from page 39

The technical data are not binding and can be modified without prior notice | The images are indicative and not binding

SUBMERSIBLE ELECTRIC PUMPS

Multistage submersible electric pump with motor connection according to NEMA standard.

Electric pump:

- Outlets: AISI 304 Stainless Steel (IDF/ID6)
  Cast iron (IDS8)
- Case AISI 304 Stainless Steel
- Impeller: Noryl (IDF/ID6)
  Cast iron (IDS8)
- Diffuser Polycarbonate (IDF/ID6)
  Cast iron (IDS8)
- Shaft: AISI 304 Stainless Steel (IDF/ID6)
  AISI 431 Stainless Steel (IDS8)
- Motor submerged in an oil bath

ID6 65

Units with Electric pump on page 206

Pump Model	ID Pump	Motor Electrical kW	Column Ø		Flow Rate - m³/h 0	36	42	48	54	60	66	72	78	84	90
ID6 65/5	861	11	65	H (mwc)	82	66	62	59	54	50	44	38	31	24	15
ID6 65/7	862	15	65		115	92	87	82	76	69	62	53	44	34	21
ID6 65/9	863	18.5	50		148	118	112	106	98	89	79	68	57	43	27

IDS8 NA

Units with Electric pump on page 208

Pump Model	ID Pump	Motor Electrical kW	Column Ø		Flow Rate - m³/h 0	30	36	42	48	54	60	66	72	78	84	90	96
IDS8 NA/4	881	15	80	H (mwc)	110	88	84	79	75	70	65	60	54	48	41	35	28
IDS8 NA/5	882	18.5	50		137	110	104	98	93	87	81	74	67	59	51	43	35

IDS8 NB

Units with Electric pump on page 210

Pump Model	ID Pump	Motor Electrical kW	Column Ø		Flow Rate - m³/h 0	48	54	60	66	72	78	84	90	96	108	120	126
IDS8 NB/4	901	18.5	65	H (mwc)	107	81	78	74	71	68	65	61	58	54	45	35	30
IDS8 NB/5	902	30	65		134	101	97	93	89	85	81	76	72	67	57	44	38
IDS8 NB/6	903	30	80		166	125	120	115	110	105	100	95	89	83	70	55	47

IDS8 NC

Units with Electric pump on page 212

Pump Model	ID Pump	Motor Electrical kW	Column Ø		Flow Rate - m³/h 0	72	78	84	90	96	108	120	126	132	150
IDS8 NC/4	921	22	80	H (mwc)	105	73	70	66	63	59	51	44	39	35	22
IDS8 NC/5	922	30	80		131	91	87	83	79	74	64	55	49	44	27

Jockey pumps available from page 39

The technical data are not binding and can be modified without prior notice | The images are indicative and not binding

JOCKEY ELECTRIC PUMPS

FOR UNITS WITH HORIZONTAL CENTRIFUGAL MAIN PUMPS

- Self-Priming Electric Pump Jet 200A 1.5 kW
- Self-Priming Electric Pump Jet 300AP 2.2 kW

Features:

- Pump body and motor support in cast iron
- Brass impeller
- Diffuser in Noryl
- Shaft in AISI 420 stainless steel
- Mechanical seal in ceramic/graphite
- Motor 400V/50Hz

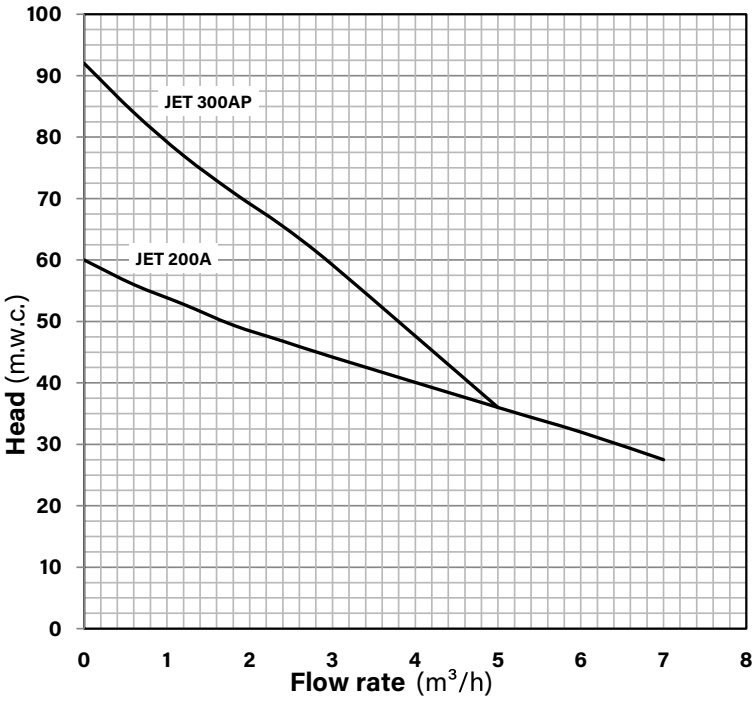

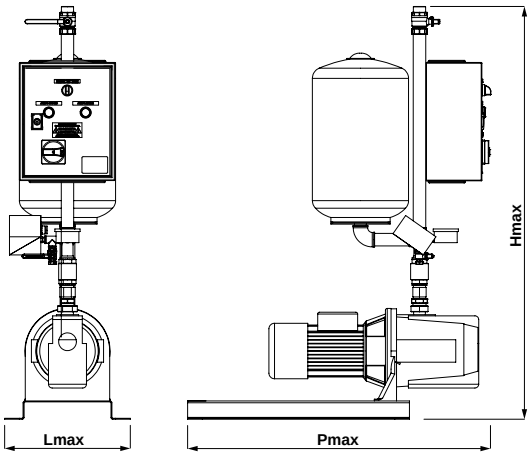

Code		Description	Field of application	Power	Intake outlet	Delivery outlet	H Max	P Max	L Max	Weight
	Hydraulic config.		mwc	kW	Ø	Ø	mm	mm	mm	kg
GP0000020	/NS - /PS	Jockey JET 200A Pump Kit	≤ 60	3~ 1.5	1"½	1"	1100	750	400	55
GP0000030	/NS - /PS	Jockey JET 300AP Pump Kit	> 60 | ≤ 90	3~ 2.2	1"½	1"	1100	750	400	58

Note:
Electric pumps used for units in standard configuration

Fire-fighting units catalogue - Edition: September-2021

JOCKEY ELECTRIC PUMPS

FOR UNITS WITH HORIZONTAL CENTRIFUGAL MAIN PUMPS

- Vertical multistage electric pump IDXVN 25-19 1.5 kW
- Vertical multistage electric pump IDXVN 25-23 2.2 kW
- Vertical multistage electric pump IDXVN 25-29 2.2 kW
- Vertical multistage electric pump IDXVN 32-16 2.2 kW
- Vertical multistage electric pump IDXVN 32-20 3 kW
- Vertical multistage electric pump IDXVN 40-12 4 kW
- Vertical multistage electric pump IDXVN 40-16 5.5 kW

Features:

- Stainless steel impellers and diffusers
- Shaft in AISI 431 stainless steel
- Mechanical seal in Widia:
- Motor 400V/50Hz

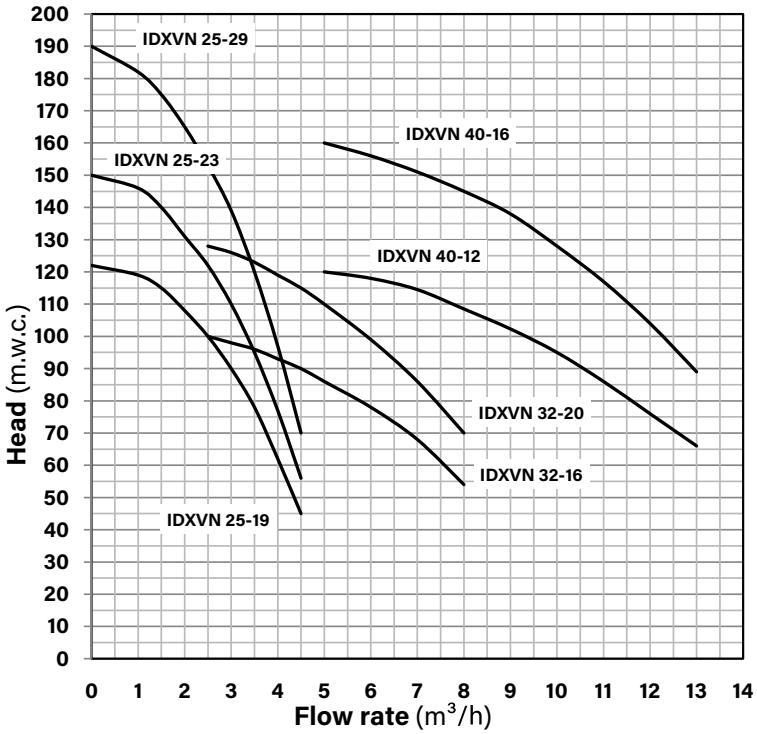

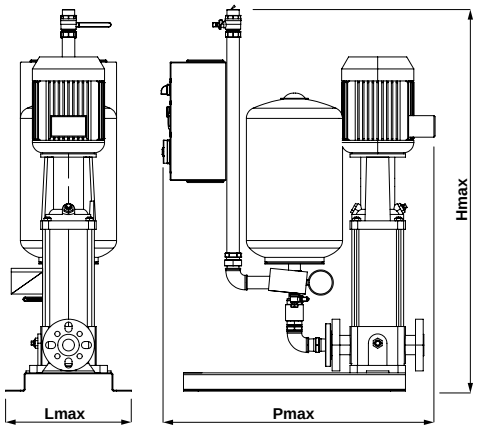

Code		Description	Field of application	Power	Intake outlet	Delivery outlet	H Max	P Max	L Max	Weight
	Hydraulic config.		mwc	kW	Ø	Ø	mm	mm	mm	kg
GP0000060	/NS - /PS	Jockey IDXVN 25-19 Pump Kit	> 90 | ≤ 120	3~ 1.5	1"¼	1"	1000	700	400	65
GP0000070	/NS - /PS	Jockey IDXVN 25-23 Pump Kit	> 120 | ≤ 150	3~ 2.2	1"¼	1"	1100	700	400	80
GP0000090	/NS - /PS	Jockey IDXVN 25-29 Pump Kit	> 150 | ≤ 190	3~ 2.2	1"¼	1"	1150	700	400	90
GP0000092	/NS - /PS	Jockey IDXVN 32-16 Pump Kit	> 54 | ≤ 100	3~ 2.2	1"¼	1"	1000	700	400	75
GP0000094	/NS - /PS	Jockey IDXVN 32-20 Pump Kit	> 70 | ≤ 128	3~ 3	1"¼	1"	1100	700	400	85
GP0000096	/NS - /PS	Jockey IDXVN 40-12 Pump Kit	> 66 | ≤ 120	3~ 4	1"½	1"	1000	700	400	85
GP0000098	/NS - /PS	Jockey IDXVN 40-16 Pump Kit	> 90 | ≤ 160	3~ 5.5	1"½	1"	1100	700	400	90

Note:
Electric pumps used for units in standard configuration

The technical data are not binding and can be modified without prior notice | The images are indicative and not binding

JOCKEY ELECTRIC PUMPS

FOR UNITS WITH NEGATIVE SUCTION HEAD HORIZONTAL CENTRIFUGAL PUMPS, WITH VTP PUMPS OR WITH SUBMERSIBLE ELECTRIC PUMPS

- Submersible electric pump A100 0.75 kW
- Submersible electric pump A120 0.9 kW
- Submersible electric pump A150 1.1 kW
- Submersible electric pump IDF4 C/200 1.5 kW
- Submersible electric pump IDF4 A/150 1.1 kW
- Submersible electric pump IDF4 A/200 1.5 kW

Features:

- Pump body and grid in AISI 304 Stainless steel
- Impeller and diffusers in Noryl
- Shaft in AISI 304 Stainless Steel
- Motor body in AISI 304 Stainless steel
- Mechanical seal with Silicon/Silicon/NBR oil chamber
- Motor 400V/50Hz

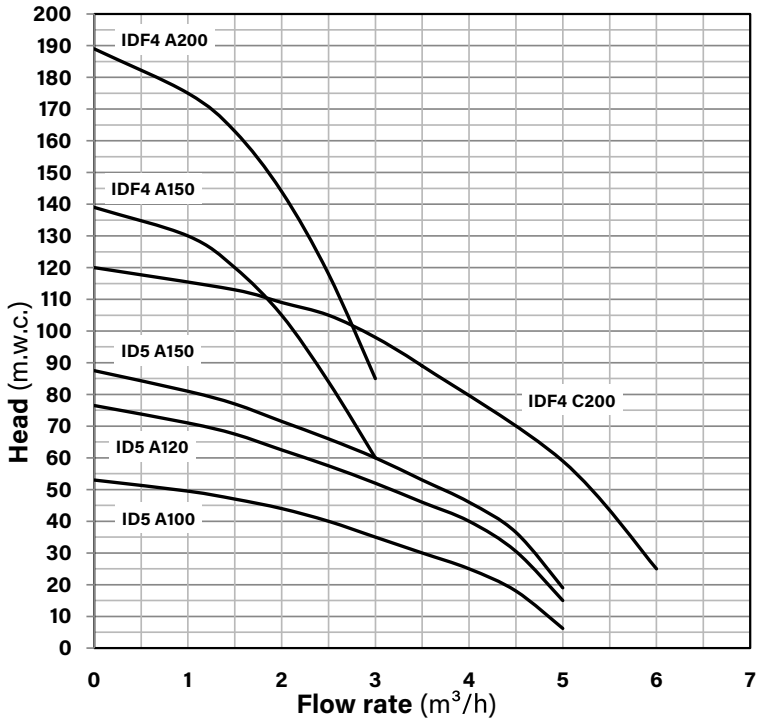

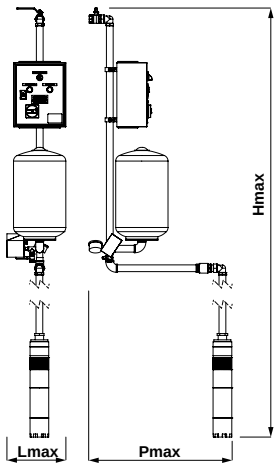

Code	Description	Field of application	Power	Delivery outlet	H Max	P Max	L Max	Weight
		mwc	kW	Ø	mm	mm	mm	kg
GP0000100	Jockey ID5 A100T Pump Kit	> 0 | ≤ 50	3~ 0.75	1"	2500	300	300	30
GP0000112	Jockey ID5 A120M Pump Kit	> 50 | ≤ 58	1~ 0.9	1"	2500	300	300	35
GP0000115	Jockey ID5 A150M Pump Kit	> 58 | ≤ 85	1~ 1.1	1"	2500	300	300	35
GP0000110	Jockey ID5 A150T Pump Kit	> 58 | ≤ 85	3~ 1.1	1"	2500	300	300	35
GP0000120	Jockey IDF4 C/200 Pump Kit	> 85 | ≤ 118	3~ 1.5	1"	2500	300	300	50
GP0000125	Jockey IDF4 A/150 Pump Kit	> 85 | ≤ 135	3~ 1.1	1"	2500	300	300	45
GP0000130	Jockey IDF4 A/200 Pump Kit	> 139| ≤ 200	3~ 1.5	1"	2500	300	300	55

Note:
Electric pumps used for units in standard configuration

The technical data are not binding and can be modified without prior notice | The images are indicative and not binding

AVAILABLE ON REQUEST

MULTISTAGE PUMPS

Multistage centrifugal pumps with a horizontal or vertical shaft, actuated by a flexible coupling.

COMPONENTS
Intake body with axial or radial inlet. Delivery body with outlet facing upwards, with the option of rotating it 90° in both directions.

CHARACTERISTIC DATA
Maximum flow rate 350 m^3/h
Maximum head 500 m
Nominal operating pressure up to PN63
Outlets from DN 65 to DN 150

MATERIALS
Intake body, delivery body, impellers, stage bodies and diffusers in cast iron and carbon steel.
Other metallurgies available on request

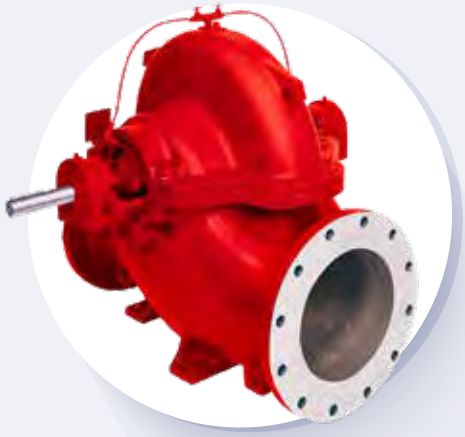

PUMPS WITH SPLIT CASE

Split case pumps with double intake radial impeller, actuated by a cardan joint.

COMPONENTS
Double volute design with optional horizontal or vertical installation. The symmetrical shape allows the control side to be positioned on either side of the pump.
Versions with mechanical or packing seal.

CHARACTERISTIC DATA
Maximum flow rate 5000 m^3/h
Maximum head 200 m
Nominal operating pressure up to PN25
Outlets from DN 125 to DN 500

MATERIALS
Case, lids, supports and impellers in cast iron
Other metallurgies available on request

The technical data are not binding and can be modified without prior notice | The images are indicative and not binding

EUROFIRE ELECTRIC

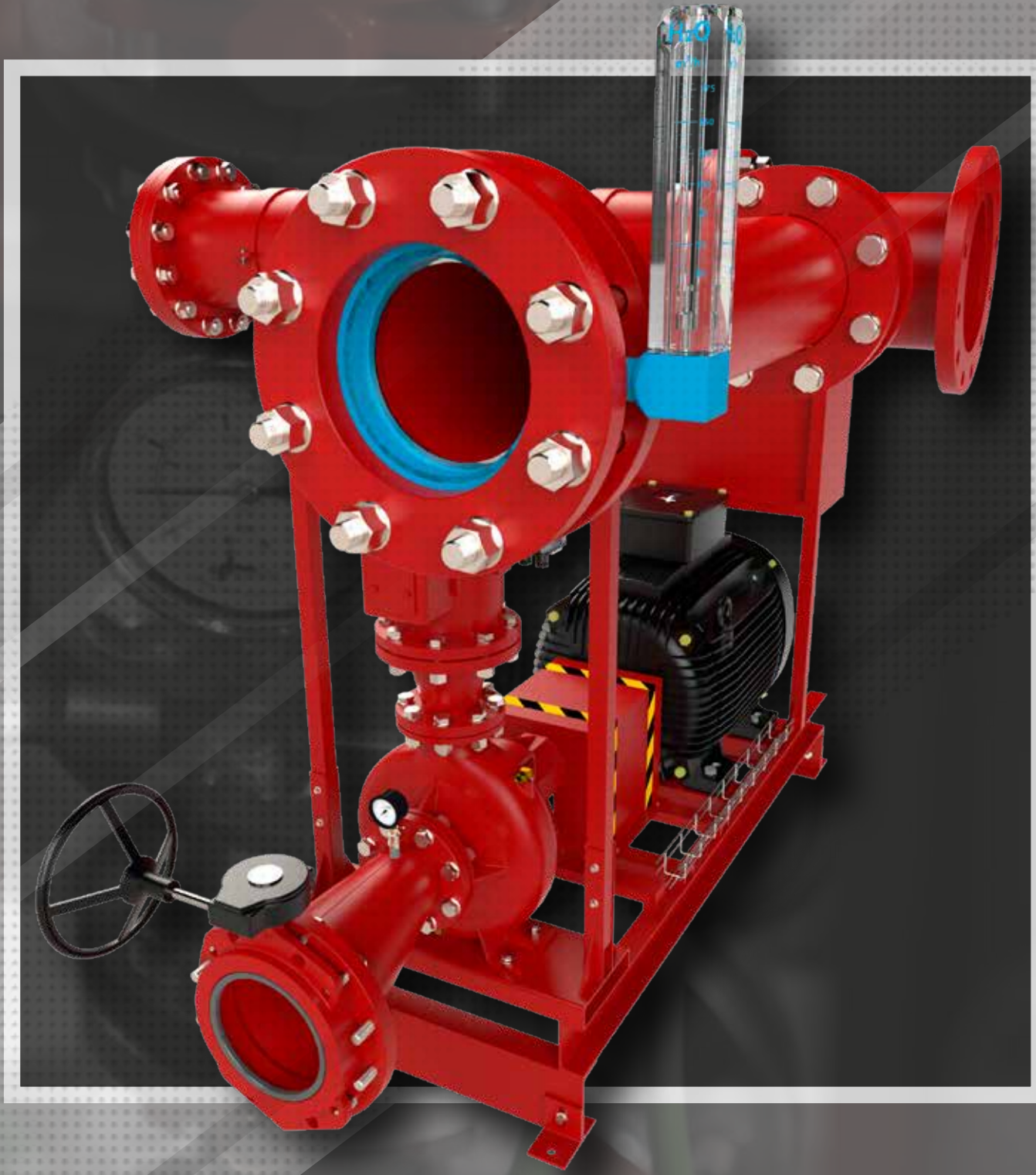

UNI EN 12845 - UNI EN 10779

EUROFIRE ELECTRIC

Fire-fighting pressurisation units according to UNI EN 12845
With Horizontal Centrifugal Electric Pumps

MAIN FEATURES

The EUROFIRE series in MODULAR version includes units with:

Flow rate Q	up to	800	m^3/h
Head H	up to	159	mwc
Electric pump	up to	250	kW
Diesel pump	up to	255	kW

Every module is autonomous and reflects the definition of a pumping unit (PUMP-SET) as described in **UNI 11292:2019 3.15.**

Every pumping unit includes:

- End suction, back pull out single-impeller centrifugal pump **UNI EN 12845 10.1**
- Electric motor with power exceeding that required by the pump at **NPSH16 UNI EN 12845 10.1-10.9.1-10.9.3**
- Spacer flexible coupling **UNI EN 12845 10.1**
- Base in metal profiles
- Electrical panel with Epro intelligent control unit
- Hydraulic accessories external to the pump-set with diameters sized according to **UNI EN 12845 13.2.3**
- Electric accessories external to the pump-set

Every pumping unit is designed to be independently secured to the foundation/base floor **UNI 11292:2019 6.6**
The units are available in the **POSITIVE** and **NEGATIVE SUCTION HEAD** versions

Hydraulic diagram page 45
List of components page 46
Completion accessories page 215

Fire-fighting units catalogue - Edition: September-2021

The technical data are not binding and can be modified without prior notice | The images are indicative and not binding

EUROFIRE ELECTRIC
Fire-fighting pressurisation units according to UNI EN 12845
With Horizontal Centrifugal Electric Pumps

HYDRAULIC DIAGRAM

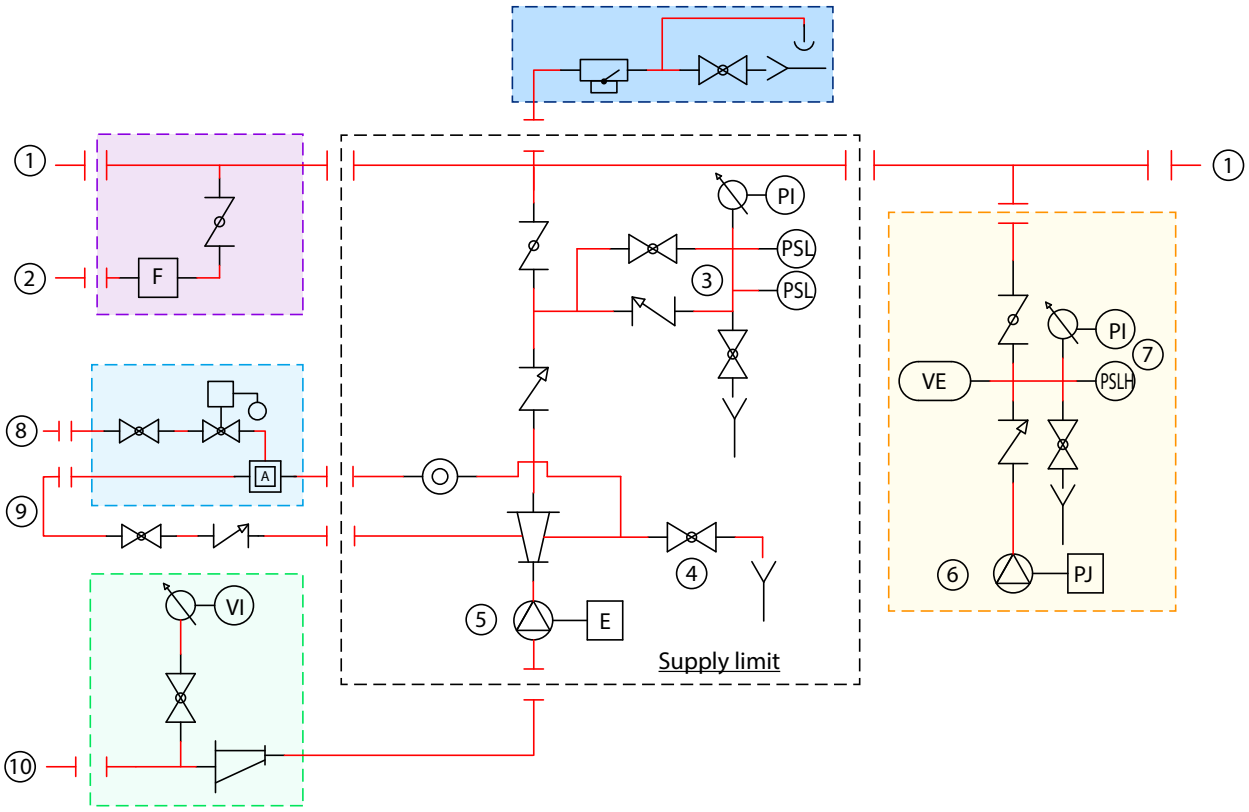

KEY

1. Delivery to the system
2. Return in flow meter tank
3. Pressure switch test circuit
4. Drain valve (leak test)
5. Main pump
6. Jockey pump
7. Jockey pump pressure switch unit
8. Priming tank water supply
9. Priming circuit
10. Intake pipe

Instruments

Piping

Optional supply

Flow Meter Kit

Priming kit (negative suction head only)

Jockey Pump kit

Intake kit

Sprinkler circuit kit

	Pump		Normally open ball valve	PSLH	Jockey Pump start/stop pressure switch
E	Main pump electric motor		Normally closed ball valve	PSL	Pump start pressure switch
D	Main pump diesel engine		Throttle valve with handwheel	VI	Vacuum gauge
PJ	Jockey Pump electrical motor		Throttle valve with lever		Water Reserve Tank
	Eccentric cone		Clapet check valve	A	Priming Tank 500 ℓ
	Expansion		Safety valve		EC UNI EN 12259-5 flow switch
VE	Preloaded expansion vessel		Gate valve with handwheel		Pendent sprinkler head 1/2 k=80
PI	Pressure gauge	F	Flowmeter	IF	Flow indicator
	Diaphragm		Open drain		Heat exchanger
	"Y' filter		Pressure reducer		Filling float

Fire-fighting units catalogue - Edition: September-2021

EUROFIRE ELECTRIC

Fire-fighting pressurisation units according to UNI EN 12845 with Horizontal Centrifugal electric pumps

MAIN COMPONENTS

NEGATIVE SUCTION HEAD VERSION

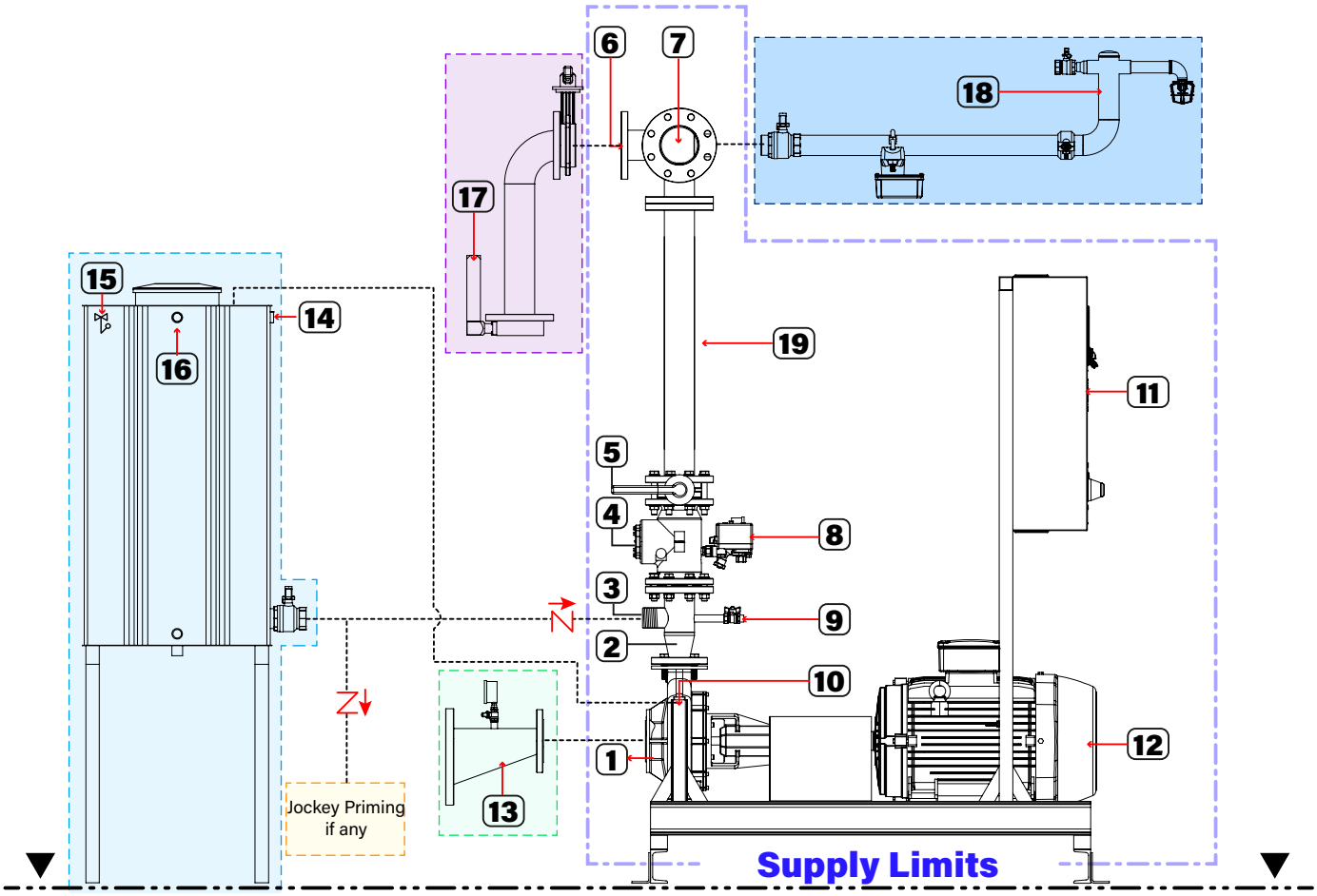

1	Main pump
2	Expansion stub pipe with branches
3	Main pump priming
4	Inspectable check valve
5	Shut-off valve
6	Branch for flow meter (where applicable)
7	Delivery manifold
8	Pressure switches circuit
9	Drain 1/2" diam. - check valve seal check circuit
10	Minimum flow diaphragm
11	Electric Control Unit

12	Electrical Motor
13	Eccentric cone
14	Mechanical filling float
15	Electric empty tank alarm float (see panel diagram)
16	Overflow drain to be visibly channelled (while the main pump runs, the overflow drain will allow the water from the diaphragm to come out)
17	Flowmeter kit complete with upstream pipe section L> 5 diam.
18	2" Sprinkler Kit complete with Flow switch in accordance with UNI EN 12259-5
19	Optional extension kit H ≥ 2 m UNI EN 11292

Fire-fighting units catalogue - Edition: September-2021

The technical data are not binding and can be modified without prior notice | The images are indicative and not binding

EUROFIRE ELECTRIC

Fire-fighting pressurisation units according to UNI EN 12845 with Horizontal Centrifugal electric pumps

MAIN COMPONENTS

POSITIVE SUCTION HEAD VERSION

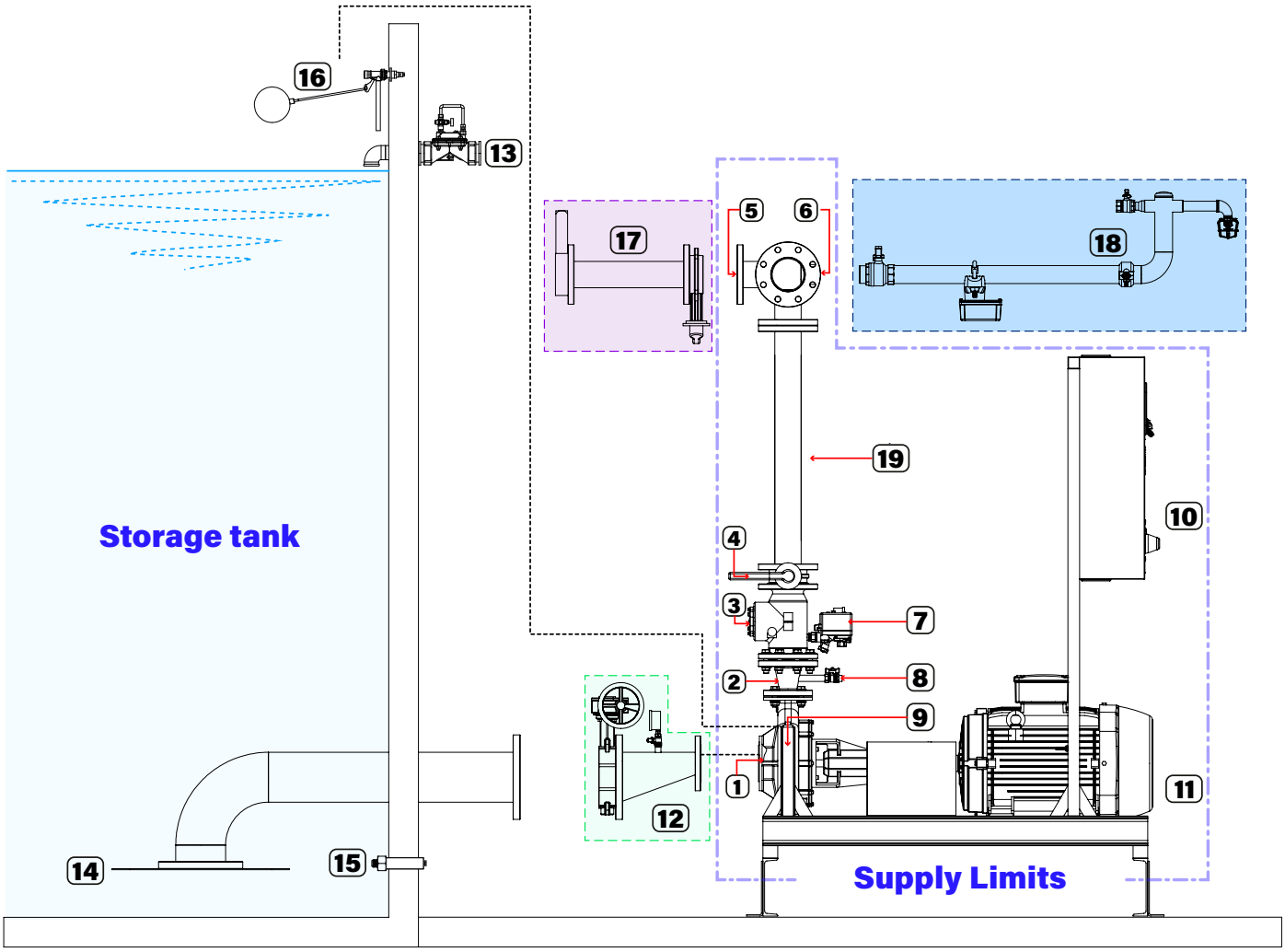

1	Main pump
2	Expansion stub pipe with branches
3	Inspectable check valve
4	Shut-off valve
5	Branch for flow meter (where applicable)
6	Delivery manifold
7	Pressure switch circuit
8	Drain 1/2" diam. - check valve seal check circuit
9	Minimum flow diaphragm
10	Electric Control Unit

11	Electrical motor
12	Eccentric cone
13	Filling water valve
14	Anti-Vortex Plate
15	Level Transmitter
16	Water Valve Float
17	Flowmeter kit complete with upstream and downstream pipe sections L> 5 diam.
18	2" Sprinkler Kit complete with Flow switch in accordance with UNI EN 12259-5
19	Optional extension kit H ≥ 2 m UNI EN 11292

Fire-fighting units catalogue - Edition: September-2021

EUROFIRE WITH ELECTRIC PUMP 32-160
UNI EN 12845

PRO ELECTRIC

GSM

PERFORMANCE RANGE

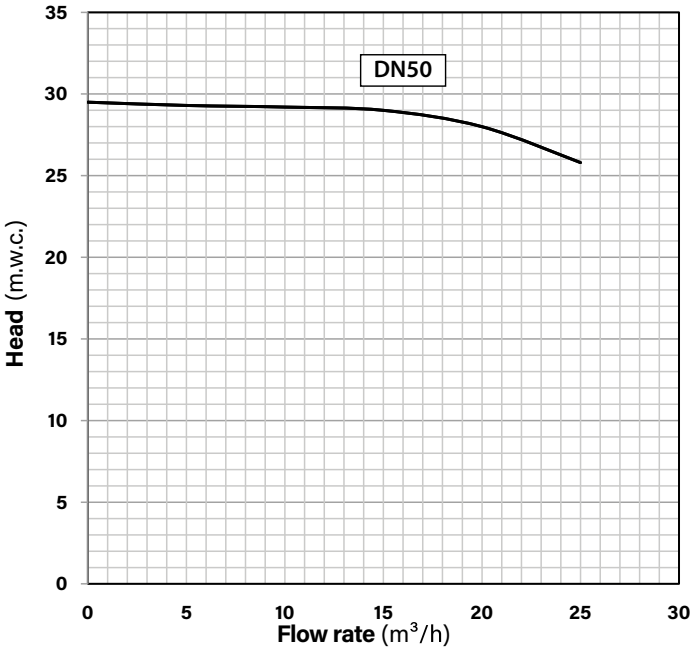

CENTRIFUGAL PUMP

END SUCTION normalised single-impeller centrifuge with **BACK PULL OUT** horizontal shaft, with a spiral diffuser and separate support; axial intake and radial delivery UNI EN 12845 10.1

- Pump body and impeller: EN GJL 250 cast iron
- Shaft: AISI 431 Stainless Steel
- Mechanical seal: Ceramic-Graphite

MOTOR

Three-phase asynchronous closed externally self-ventilated with cage rotor Power calculated based on the power absorbed at the point of the characteristic curve which corresponds to a **NPSH of 16 m UNI EN 12845:2020 10.1**

HYDRAULIC PUMPS 32-160 EFFICIENCY

Diesel Version page 98

Pump Model	Pump ID	Motor		Pump Fittings			Flow Rate - m³/h						
		Electrical	Diesel	Intake	Delivery								
		kW	kW	Ø	Ø		0	5	10	15	20	25	30
32-160/1	010	3	6.2	50	32	H	29.5	29.3	29.2	29.0	28.0	25.8	

The values to the left of the reference refer to the maximum allowed delivery speed of 6 m/sec - The RED values entail speeds higher than 6 m/sec - The Values with GREY background indicate NPSH-R > 5m values.
For installations in HHS-HHP systems, contact our technical department. Nominal hydraulic characteristics of flow rate and head at the pump inlet, with performance tolerances according to UNI EN ISO 9906:2012 Grade 3B

EUROFIRE WITH ELECTRIC PUMP 32-160
UNI EN 12845

CENTRIFUGAL PUMP

COUPLING JOINT

Pump-motor connection via a spacer flexible coupling complete with accident prevention casing UNI EN 12845 10.1

KEY

NID	Nom. Intake Diameter
NDD	Nom. Delivery Diameter
NCD	Nom. Column Diameter
NS	Negative suction head set-up
PS	Positive suction head set-up
AD	Only found in the Negative suction head version **NS**

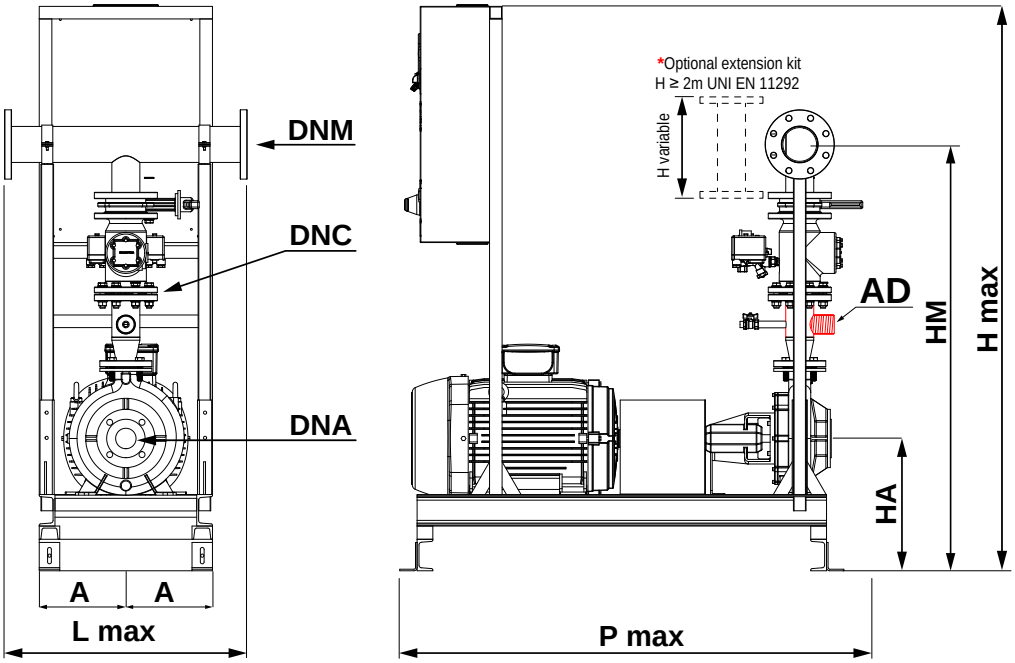

* H rise optional extension ≥ 2m

DIMENSIONS AND WEIGHTS OF EUROFIRE WITH ELECTRIC PUMPS 32-160

Jockey pumps on page 39

Q max	PRODUCT CODE 32-160				Power Pump	NID.	DNM	HA	HM		A	H max	L max	P max	Weight
									SP	ST					
m³/h	COMP..	ID Pump	DNC	HYDRAULIC CONFIG.	kW Electrical	Ø	Ø	mm	mm	mm	mm	mm	mm	mm	kg
≤ 40	GC0E0	010	050 C	/NS - /PS	3	50	65	352	1150*	1031*	250	1790	710	1140	313

The technical data are not binding and can be modified without prior notice | The images are indicative and not binding

EUROFIRE WITH ELECTRIC PUMP 32-200
UNI EN 12845

PRO ELECTRIC

GSM

PERFORMANCE RANGE

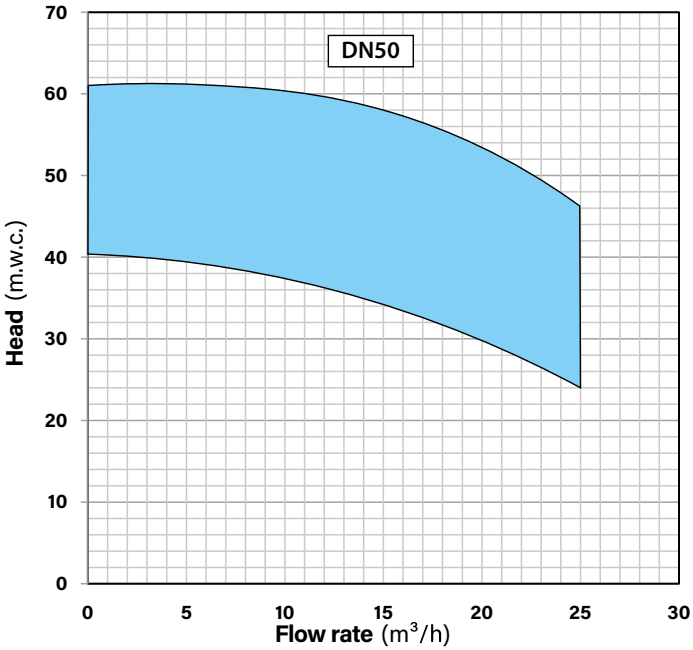

CENTRIFUGAL PUMP

END SUCTION normalised single-impeller centrifuge with **BACK PULL OUT** horizontal shaft, with a spiral diffuser and separate support; axial intake and radial delivery UNI EN 12845 10.1

- Pump body and impeller: EN GJL 250 cast iron
- Shaft: AISI 431 Stainless Steel
- Mechanical seal: Ceramic-Graphite

MOTOR

Three-phase asynchronous closed externally self-ventilated with cage rotor Power calculated based on the power absorbed at the point of the characteristic curve which corresponds to a **NPSH of 16 m UNI EN 12845:2020 10.1**

HYDRAULIC PUMPS 32-200 EFFICIENCY

Diesel Version page 100

Pump Model	Pump ID	Motor		Pump Fittings			Flow Rate - m³/h						
		Electrical	Diesel	Intake	Delivery								
		kW	kW	Ø	Ø		0	5	10	15	20	25	30
32-200/14	020	4	6.2	50	32	H (mwc)	40.5	39	37	34.5	30	24	
32-200/2	025	5.5	6.2	50	32		50	48	46	43	40	37	
32-200/3	026	5.5	6.2	50	32		53	53	51	49	44.5		
32-200/4	027	5.5	6.2	50	32		56	56	54.5	51.5	46.5		
32-200/5	028	7.5	6.2	50	32		54	50.5	48	44.5	41	36	
32-200/8	030	7.5	7	50	32		61	61	60	58	53		
32-200/9	032	7.5	7	50	32		58.5	57.5	56	53	48	43	

The values to the left of the reference refer to the maximum allowed delivery speed of 6 m/sec - The RED values entail speeds higher than 6 m/sec - The Values with GREY background indicate NPSH-R > 5m values.
For installations in HHS-HHP systems, contact our technical department. Nominal hydraulic characteristics of flow rate and head at the pump inlet, with performance tolerances according to UNI EN ISO 9906:2012 Grade 3B

EUROFIRE WITH ELECTRIC PUMP 32-200
UNI EN 12845

CENTRIFUGAL PUMP

COUPLING JOINT

Pump-motor connection via a spacer flexible coupling complete with accident prevention casing UNI EN 12845 10.1

KEY

NID	Nom. Intake Diameter
NDD	Nom. Delivery Diameter
NCD	Nom. Column Diameter
NS	Negative suction head set-up
PS	Positive suction head set-up
AD	Only found in the Negative suction head version **NS**

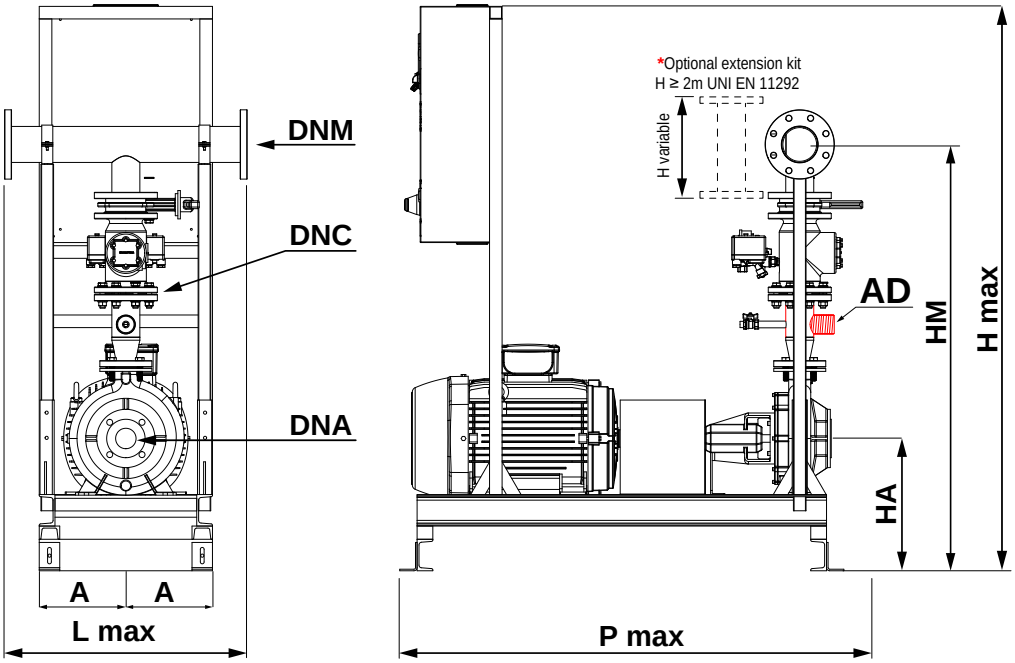

* H rise optional extension ≥ 2m

DIMENSIONS AND WEIGHTS OF EUROFIRE WITH ELECTRIC PUMPS 32-200

Jockey pumps on page 39

Q max	PRODUCT CODE 32-200					Power Pump	NID.	DNM	HA	HM		A	H max	L max	P max	Weight
										SP	ST					
m³/h	COMP..	ID Pump	DNC		HYDRAULIC CONFIG.	kW Electrical	Ø	Ø	mm	mm	mm	mm	mm	mm	mm	kg
≤ 40	GC0E0	020	050	C	/NS - /PS	4	50	65	352	1170*	1051*	250	1790	710	1140	325
	GC0E0	025-026-027	050	C	/NS - /PS	5.5	50	65	352	1170*	1051*	250	1790	710	1140	344
	GC0E0	028-030-032	050	C	/NS - /PS	7.5	50	65	352	1170*	1051*	250	1790	710	1140	347

Fire-fighting units catalogue - Edition: September-2021

EUROFIRE WITH ELECTRIC PUMP 32-250
UNI EN 12845

EPRO ELECTRIC

GSM

PERFORMANCE RANGE

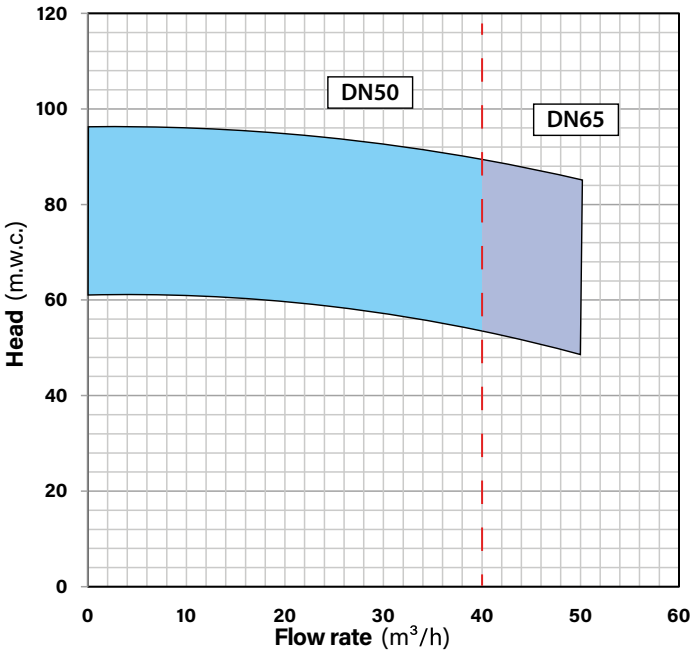

CENTRIFUGAL PUMP

END SUCTION normalised single-impeller centrifuge with **BACK PULL OUT** horizontal shaft, with a spiral diffuser and separate support; axial intake and radial delivery UNI EN 12845 10.1

- Pump body and impeller: EN GJL 250 cast iron
- Shaft: AISI 431 Stainless Steel
- Mechanical seal: Ceramic-Graphite

MOTOR

Three-phase asynchronous closed externally self-ventilated with cage rotor Power calculated based on the power absorbed at the point of the characteristic curve which corresponds to a **NPSH of 16 m UNI EN 12845:2020 10.1**

HYDRAULIC PUMPS 32-250 EFFICIENCY

Diesel Version page 102

Pump Model	Pump ID	Motor		Pump Fittings			Flow Rate - m³/h											
		Electrical	Diesel	Intake	Delivery													
		kW	kW	Ø	Ø		0	5	10	15	20	25	30	35	40	45	50	55
32-250/3	035	11	12.8	50	32	H (mwc)	91	91	89	84	69							
32-250/13	036	15	17.5	50	32		77.5	77	76.5	76	76	74	70					
32-250/5	037	15	17.5	50	32		61	61	61	60.5	60	59	57.5	56	54	52	49	
32-250/7	040	18.5	17.5	50	32		66	66	66	66	65.5	65.5	65	64	62	59.5	56.5	
32-250/11	045	18.5	17.5	50	32		89.5	89.5	89.5	89.5	89	87	83	77				
32-250/8	052	18.5	25.2	50	32		70	70	70	69.5	69	68	67	65.5	64	62	60	
32-250/10	047	18.5	25.2	50	32		96	96	95.5	95	94.5	92	89	83				
32-250/9	050	22	25.2	50	32		78	78	78	78	77	76	75	73.5	72	70	67	
32-250/12	055	30	25.2	50	32		96	95.5	95	94.5	94	93	92	91	89.5	88	85	

The values to the left of the reference refer to the maximum allowed delivery speed of 6 m/sec - The RED values entail speeds higher than 6 m/sec - The Values with GREY background indicate NPSH-R > 5m values.
For installations in HHS-HHP systems, contact our technical department. Nominal hydraulic characteristics of flow rate and head at the pump inlet, with performance tolerances according to UNI EN ISO 9906:2012 Grade 3B

EUROFIRE WITH ELECTRIC PUMP 32-250
UNI EN 12845

CENTRIFUGAL PUMP

COUPLING JOINT

Pump-motor connection via a spacer flexible coupling complete with accident prevention casing UNI EN 12845 10.1

KEY

NID	Nom. Intake Diameter
NDD	Nom. Delivery Diameter
NCD	Nom. Column Diameter
NS	Negative suction head set-up
PS	Positive suction head set-up
AD	Only found in the Negative suction head version **NS**

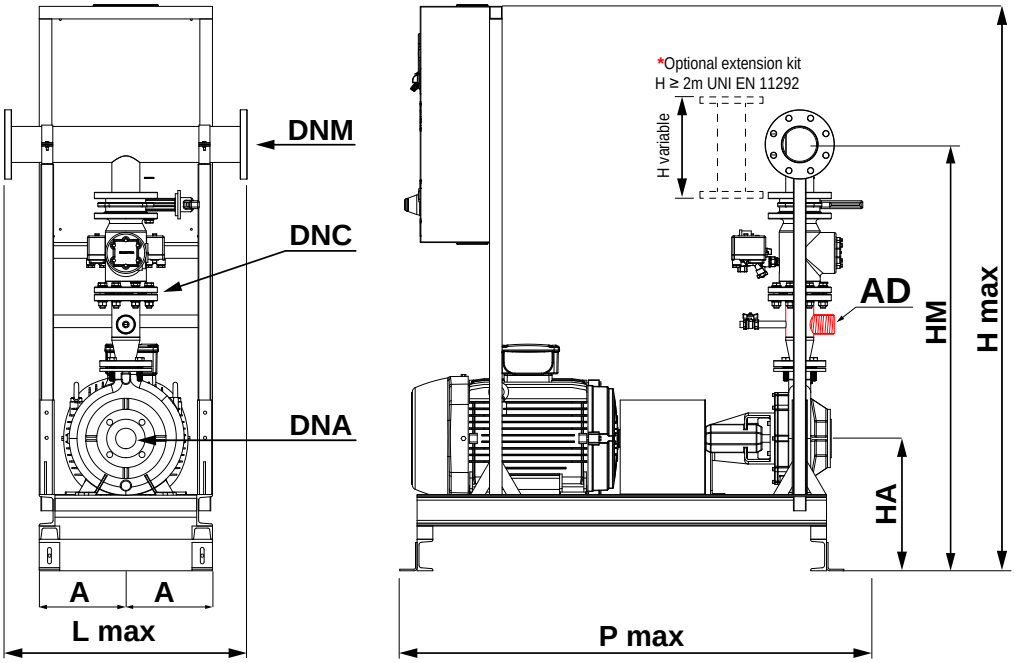

* H rise optional extension ≥ 2m

DIMENSIONS AND WEIGHTS OF EUROFIRE WITH ELECTRIC PUMPS 32-250

Jockey pumps on page 39

Q max	PRODUCT CODE 32-250					Power Pump	NID.	DNM	HA	HM		A	H max	L max	P max	Weight
										SP	ST					
m³/h	COMP..	ID Pump	DNC		HYDRAULIC CONFIG.	kW Electrical	Ø	Ø	mm	mm	mm	mm	mm	mm	mm	kg
≤ 40	GC0E0	035	050	C	/NS - /PS	11	50	65	420	1283*	1164*	270	1792	710	1340	400
	GC0E0	036-037	050	C	/NS - /PS	15	50	65	420	1283*	1164*	270	1792	710	1340	410
	GC0E0	040-045-047-052	050	C	/NS - /PS	18.5	50	65	420	1283*	1164*	250	1792	710	1340	427
	GC0E0	050	050	C	/NS - /PS	22	50	65	420	1283*	1164*	250	1792	710	1340	462
	GC0E0	055	050	C	/NS - /PS	30	50	65	420	1283*	1164*	275	1792	710	1440	523

Fire-fighting units catalogue - Edition: September-2021

EUROFIRE WITH ELECTRIC PUMP 40-200
UNI EN 12845

PRO ELECTRIC

GSM

PERFORMANCE RANGE

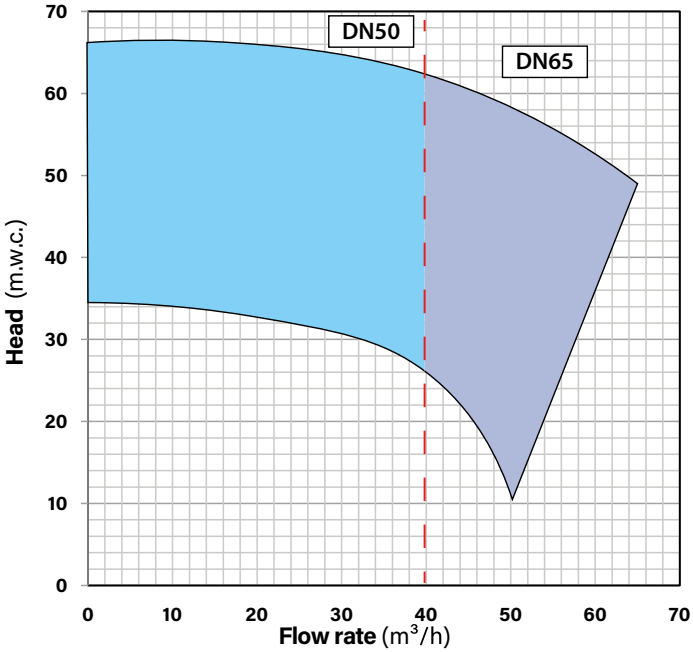

CENTRIFUGAL PUMP

END SUCTION normalised single-impeller centrifuge with **BACK PULL OUT** horizontal shaft, with a spiral diffuser and separate support; axial intake and radial delivery UNI EN 12845 10.1

- Pump body and impeller: EN GJL 250 cast iron
- Shaft: AISI 431 Stainless Steel
- Mechanical seal: Ceramic-Graphite

MOTOR

Three-phase asynchronous closed externally self-ventilated with cage rotor Power calculated based on the power absorbed at the point of the characteristic curve which corresponds to a **NPSH of 16 m UNI EN 12845:2020 10.1**

HYDRAULIC PUMPS 40-200 EFFICIENCY

Diesel Version page 104

Pump Model	Pump ID	Motor		Pump Fittings			Flow Rate - m³/h													
		Electrical	Diesel	Intake	Delivery															
		kW	kW	Ø	Ø		0	5	10	15	20	25	30	35	40	45	50	55	60	65
40-200/5	090	5.5	6.2	65	40	H (mwc)	34.5	34	34	33.5	33	32	31	29	26	21	11			
40-200/1	100	7.5	6.2	65	40		43	42	41.5	41	39.5	37.5	35	30	23.5					
40-200/2	103	7.5	7	65	40		47.5	47.5	47	46	45	43	40	36	31					
40-200/3	105	11	10.5	65	40		65	65	64.5	64	63	61.5	59	55	49.5					
40-200/4	110	11	10.5	65	40		58	57.5	57	56.5	56	55	54	52.5	50.5	48	45			
40-200/6	115	15	12.8	65	40		63	63	63	63	62.5	61.5	60	58	55.5	52	48			
40-200/7	116	15	17.5	65	40		66	66	66	66	66	65.5	65	64	62	60	58	55	52	49

The values to the left of the reference refer to the maximum allowed delivery speed of 6 m/sec - The RED values entail speeds higher than 6 m/sec - The Values with GREY background indicate NPSH-R > 5m values.
For installations in HHS-HHP systems, contact our technical department. Nominal hydraulic characteristics of flow rate and head at the pump inlet, with performance tolerances according to UNI EN ISO 9906:2012 Grade 3B

EUROFIRE WITH ELECTRIC PUMP 40-200
UNI EN 12845

CENTRIFUGAL PUMP

COUPLING JOINT

Pump-motor connection via a spacer flexible coupling complete with accident prevention casing UNI EN 12845 10.1

KEY

NID	Nom. Intake Diameter
NDD	Nom. Delivery Diameter
NCD	Nom. Column Diameter
NS	Negative suction head set-up
PS	Positive suction head set-up
AD	Only found in the Negative suction head version **NS**

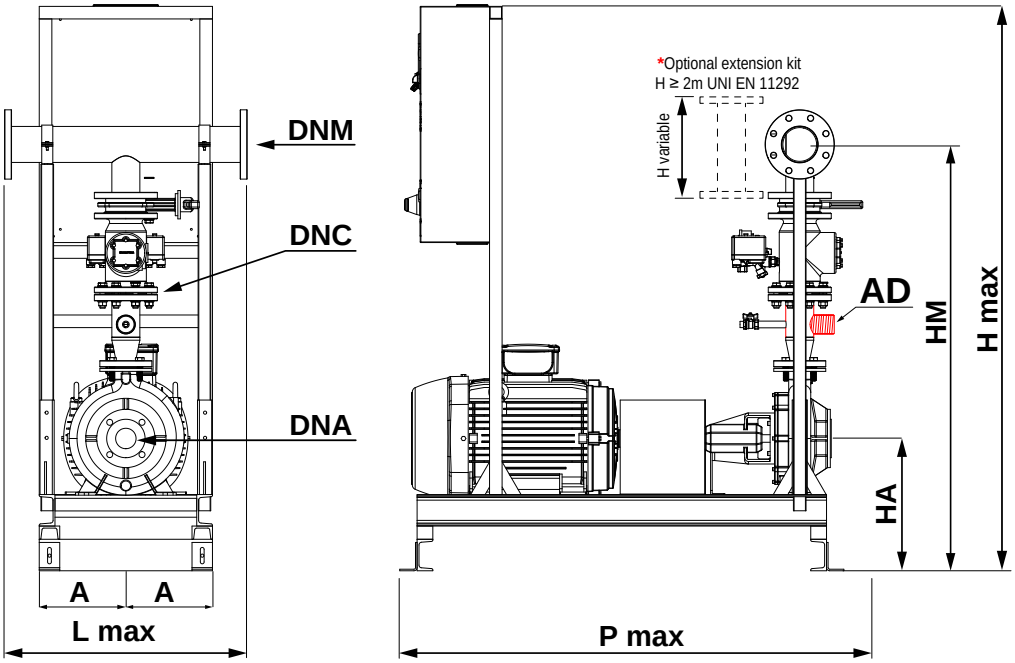

* H rise optional extension ≥ 2m

DIMENSIONS AND WEIGHTS OF EUROFIRE WITH ELECTRIC PUMPS 40-200

Jockey pumps on page 39

Q max	PRODUCT CODE 40-200					Power Pump	NID.	DNM	HA	HM		A	H max	L max	P max	Weight
										SP	ST					
m³/h	COMP..	ID Pump	DNC		HYDRAULIC CONFIG.	kW Electrical	Ø	Ø	mm	mm	mm	mm	mm	mm	mm	kg
≤ 40	GC0E0	090	050	C	/NS - /PS	5.5	65	65	352	1159*	1051*	250	1790	710	1140	346
	GC0E0	100-103	050	C	/NS - /PS	7.5	65	65	352	1159*	1051*	250	1790	710	1140	349
	GC0E0	105-110	050	C	/NS - /PS	11	65	65	352	1159*	1051*	220	1790	710	1340	394
	GC0E0	115-116	050	C	/NS - /PS	15	65	65	352	1159*	1051*	220	1790	710	1340	404
> 40	GC0E0	090	065	D	/NS - /PS	5.5	65	80	352	1218*	1108*	250	1790	710	1140	346
	GC0E0	110	065	D	/NS - /PS	11	65	80	352	1218*	1108*	220	1790	710	1340	394
	GC0E0	115-116	065	D	/NS - /PS	15	65	80	352	1218*	1108*	220	1790	710	1340	404

Fire-fighting units catalogue - Edition: September-2021

EUROFIRE WITH ELECTRIC PUMP 40-250
UNI EN 12845

PRO ELECTRIC

GSM

PERFORMANCE RANGE

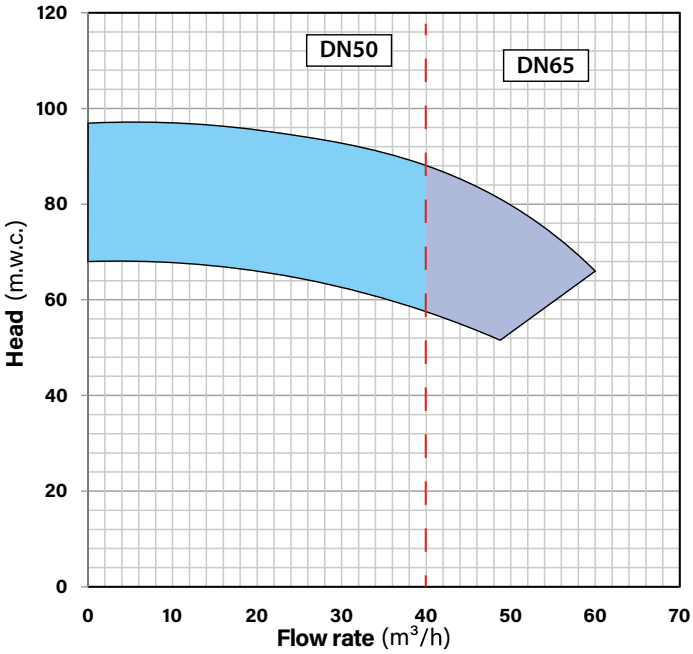

CENTRIFUGAL PUMP

END SUCTION normalised single-impeller centrifuge with **BACK PULL OUT** horizontal shaft, with a spiral diffuser and separate support; axial intake and radial delivery UNI EN 12845 10.1

- Pump body and impeller: EN GJL 250 cast iron
- Shaft: AISI 431 Stainless Steel
- Mechanical seal: Ceramic-Graphite

MOTOR

Three-phase asynchronous closed externally self-ventilated with cage rotor Power calculated based on the power absorbed at the point of the characteristic curve which corresponds to a **NPSH of 16 m UNI EN 12845:2020 10.1**

HYDRAULIC PUMPS 40-250 EFFICIENCY

Diesel Version page 106

Pump Model	Pump ID	Motor		Pump Fittings			Flow Rate - m³/h													
		Electrical	Diesel	Intake	Delivery															
		kW	kW	Ø	Ø		0	5	10	15	20	25	30	35	40	45	50	55	60	65
40-250/5	140	15	17.5	65	40	H (mwc)	69	68.5	68	67	66	64.5	62	60	57.5	55				
40-250/6	145	18.5	17.5	65	40		80	80	80	80	80	80	80	79	78	76	74	71	60	
40-250/7	150	18.5	17.5	65	40		75	74.5	74	73	71.5	70	67.5	65	62.5	59.5				
40-250/9	160	18.5	25.2	65	40		79	78.5	78	77	75.5	74	72	70	68	65	62			
40-250/10	165	22	25.2	65	40		92	91	90	89	88	86.5	85	83	81	78	74			
40-250/12	170	22	25.2	65	40		90	90	89.7	89.5	89	88.5	87.5	86	84	81	77.5	72	66	
40-250/13	180	30	25.2	65	40		97	96.5	96	95.5	95	94	92	90	87	83	79	74		

The values to the left of the reference refer to the maximum allowed delivery speed of 6 m/sec - The RED values entail speeds higher than 6 m/sec - The Values with GREY background indicate NPSH-R > 5m values.
For installations in HHS-HHP systems, contact our technical department. Nominal hydraulic characteristics of flow rate and head at the pump inlet, with performance tolerances according to UNI EN ISO 9906:2012 Grade 3B

EUROFIRE WITH ELECTRIC PUMP 40-250
UNI EN 12845

CENTRIFUGAL PUMP

COUPLING JOINT

Pump-motor connection via a spacer flexible coupling complete with accident prevention casing UNI EN 12845 10.1

KEY

NID	Nom. Intake Diameter
NDD	Nom. Delivery Diameter
NCD	Nom. Column Diameter
NS	Negative suction head set-up
PS	Positive suction head set-up
AD	Only found in the Negative suction head version **NS**

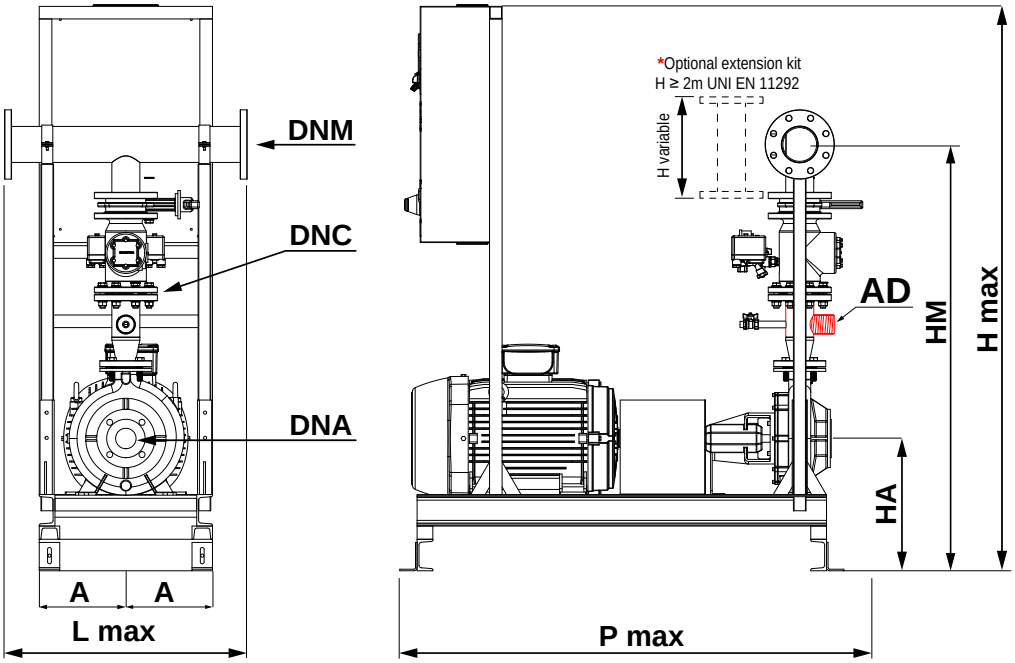

* H rise optional extension ≥ 2m

DIMENSIONS AND WEIGHTS OF EUROFIRE WITH ELECTRIC PUMPS 40-250

Jockey pumps on page 39

Q max	PRODUCT CODE 40-250					Power Pump	NID.	DNM	HA	HM SP	HM ST	A	H max	L max	P max	Weight
m³/h	COMP..	ID Pump	DNC		HYDRAULIC CONFIG.	kW Electrical	Ø	Ø	mm	mm	mm	mm	mm	mm	mm	kg
≤ 40	GC0E0	140-141	050	C	/NS - /PS	15	65	65	420	1272*	1164*	270	1792	710	1340	413
	GC0E0	145-150-160	050	C	/NS - /PS	18.5	65	65	420	1272*	1164*	250	1792	710	1340	430
	GC0E0	165-170	050	C	/NS - /PS	22	65	65	420	1272*	1164*	250	1792	710	1340	465
	GC0E0	180	050	C	/NS - /PS	30	65	65	420	1272*	1164*	275	1792	710	1440	526
> 40	GC0E0	140-141	065	D	/NS - /PS	15	65	80	420	1331*	1221*	270	1792	710	1340	423
	GC0E0	145-150-160	065	D	/NS - /PS	18.5	65	80	420	1331*	1221*	250	1792	710	1340	440
	GC0E0	165-170	065	D	/NS - /PS	22	65	80	420	1331*	1221*	250	1792	710	1340	475
	GC0E0	180	065	D	/NS - /PS	30	65	80	420	1331*	1221*	275	1792	710	1440	536

Fire-fighting units catalogue - Edition: September-2021

EUROFIRE WITH ELECTRIC PUMP 40-315
UNI EN 12845

PRO ELECTRIC

GSM

PERFORMANCE RANGE

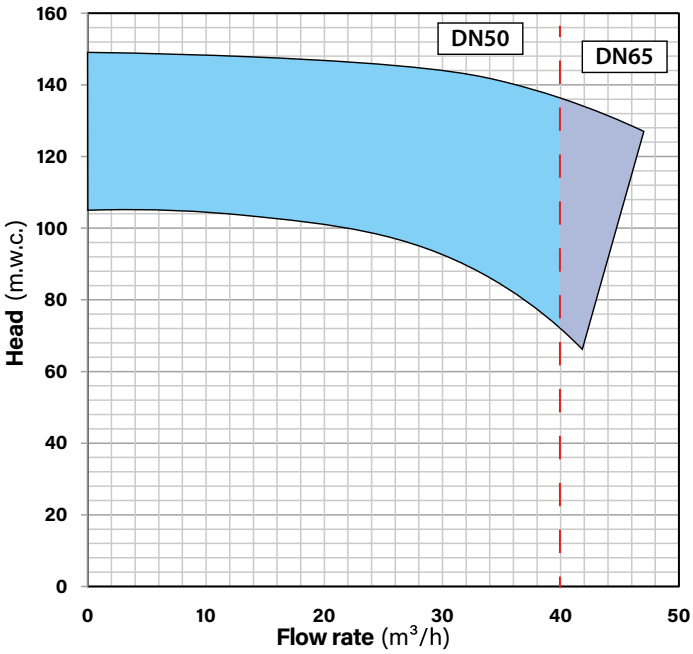

CENTRIFUGAL PUMP

END SUCTION normalised single-impeller centrifuge with **BACK PULL OUT** horizontal shaft, with a spiral diffuser and separate support; axial intake and radial delivery UNI EN 12845 10.1

- Pump body and impeller: EN GJL 250 cast iron
- Shaft: AISI 431 Stainless Steel
- Mechanical seal: Ceramic-Graphite

MOTOR

Three-phase asynchronous closed externally self-ventilated with cage rotor Power calculated based on the power absorbed at the point of the characteristic curve which corresponds to a **NPSH of 16 m UNI EN 12845:2020 10.1**

HYDRAULIC PUMPS 40-315 EFFICIENCY

Diesel Version page 108

Pump Model	Pump ID	Motor		Pump Fittings			Flow Rate - m³/h										
		Electrical	Diesel	Intake	Delivery												
		kW	kW	Ø	Ø		0	5	10	15	20	25	30	35	40	45	50
40-315/1	181	22	25.2	65	40	H (mwc)	105	104.5	104	103	101	98	93.5	85	72		
40-315/2	182	30	25.2	65	40		121	120.5	120	119	117.5	115.5	111.5	105	98	88	
40-315/3	184	30	36.5	65	40		128	127.5	127	126	125	123.5	120.5	116	109	99	
40-315/4	183	37	36.5	65	40		132	132	131.5	131	130	129	126	122	115	106.5	
40-315/5	186	37	36.5	65	40		149	148.5	148	147.5	146.5	145.5	144	141	136	130	
40-315/6	185	55	66	65	40		126	126.5	127	127.5	128	128.5	129	129	129	129	

The values to the left of the reference refer to the maximum allowed delivery speed of 6 m/sec - The RED values entail speeds higher than 6 m/sec - The Values with GREY background indicate NPSH-R > 5m values.
For installations in HHS-HHP systems, contact our technical department. Nominal hydraulic characteristics of flow rate and head at the pump inlet, with performance tolerances according to UNI EN ISO 9906:2012 Grade 3B

EUROFIRE WITH ELECTRIC PUMP 40-315
UNI EN 12845

CENTRIFUGAL PUMP

COUPLING JOINT

Pump-motor connection via a spacer flexible coupling complete with accident prevention casing UNI EN 12845 10.1

KEY

NID	Nom. Intake Diameter
NDD	Nom. Delivery Diameter
NCD	Nom. Column Diameter
NS	Negative suction head set-up
PS	Positive suction head set-up
AD	Only found in the Negative suction head version **NS**

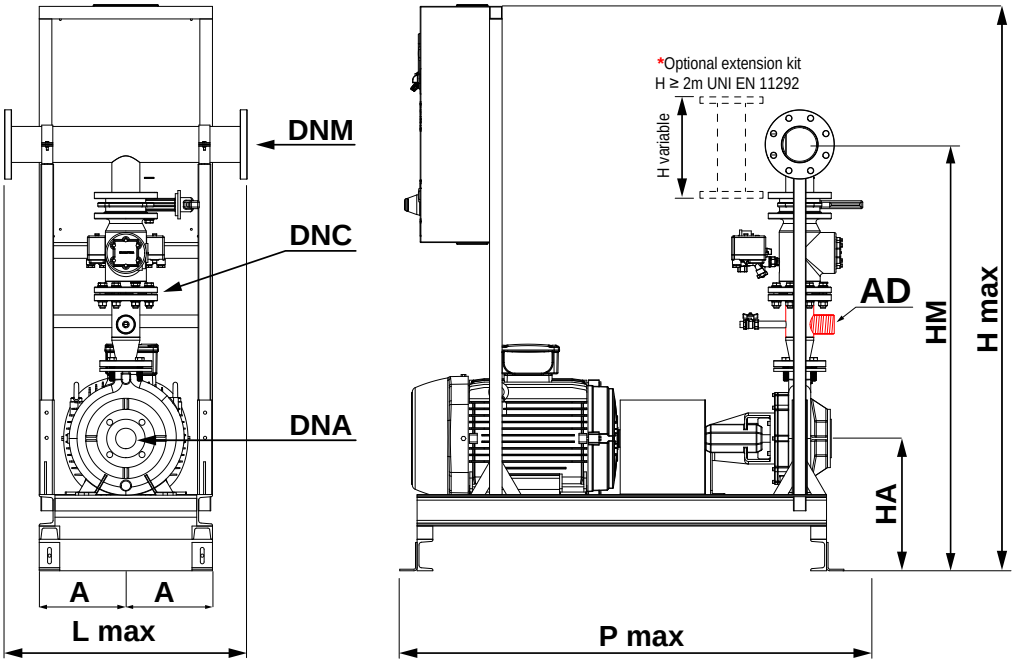

* H rise optional extension ≥ 2m

DIMENSIONS AND WEIGHTS OF EUROFIRE WITH ELECTRIC PUMPS 40-315

Jockey pumps on page 39

Q max	PRODUCT CODE 40-315					Power Pump	NID.	DNM	HA	HM		A	H max	L max	P max	Weight
										SP	ST					
m³/h	COMP..	ID Pump	DNC		HYDRAULIC CONFIG.	kW Electrical	Ø	Ø	mm	mm	mm	mm	mm	mm	mm	kg
≤ 40	GC0E0	181	050	C	/NS - /PS	22	65	65	420	1297*	1189*	345	1790	710	1949	494
	GC0E0	182-184	050	C	/NS - /PS	30	65	65	420	1297*	1189*	345	1790	710	1690	555
	GC0E0	183-186	050	C	/NS - /PS	37	65	65	420	1297*	1189*	370	1790	740	1949	574
	GC0E0	185	050	C	/NS - /PS	55	65	65	420	1347*	129*	370	1790	740	1890	712
> 40	GC0E0	181	065	D	/NS - /PS	22	65	80	420	1356*	1246*	345	1790	710	1949	504
	GC0E0	182-184	065	D	/NS - /PS	30	65	80	420	1356*	1246*	345	1790	710	1690	565
	GC0E0	183-186	065	D	/NS - /PS	37	65	80	420	1356*	1246*	370	1790	740	1949	584
	GC0E0	185	065	D	/NS - /PS	55	65	80	420	1406*	1296*	370	1790	740	1890	722

Fire-fighting units catalogue - Edition: September-2021

EUROFIRE WITH ELECTRIC PUMP 50-160
UNI EN 12845

PRO ELECTRIC

GSM

PERFORMANCE RANGE

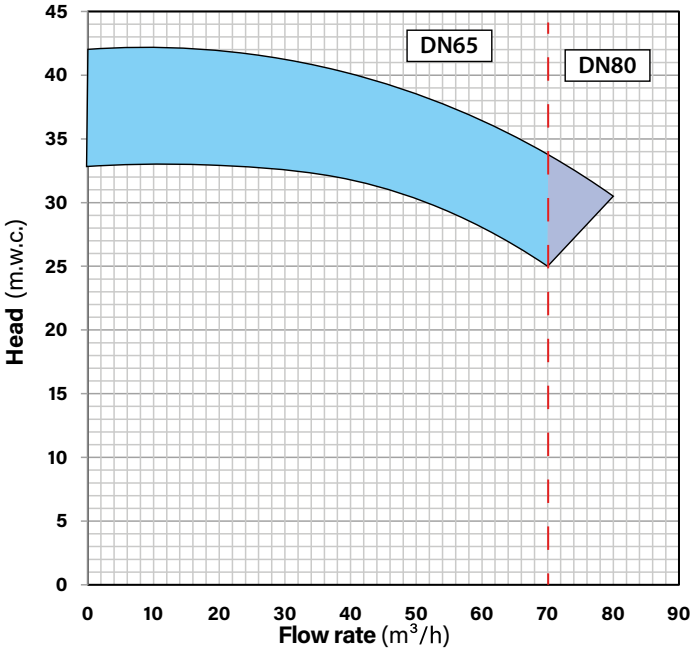

CENTRIFUGAL PUMP

END SUCTION normalised single-impeller centrifuge with **BACK PULL OUT** horizontal shaft, with a spiral diffuser and separate support; axial intake and radial delivery UNI EN 12845 10.1

- Pump body and impeller: EN GJL 250 cast iron
- Shaft: AISI 431 Stainless Steel
- Mechanical seal: Ceramic-Graphite

MOTOR

Three-phase asynchronous closed externally self-ventilated with cage rotor Power calculated based on the power absorbed at the point of the characteristic curve which corresponds to a **NPSH of 16 m UNI EN 12845:2020 10.1**

HYDRAULIC PUMPS 50-160 EFFICIENCY

Diesel Version page 110

Pump Model	Pump ID	Motor		Pump Fittings			Flow Rate - m³/h									
		Electrical	Diesel	Intake	Delivery											
		kW	kW	Ø	Ø		0	10	20	30	40	50	60	70	80	90
50-160/1	192	7.5	7	65	50	H (mwc)	33	33	33	32.5	32	30.5	28	25		
50-160/2	194	11	10.5	65	50	H (mwc)	42	42	41.5	41	40	38	36	33.5	30.5	

The values to the left of the reference refer to the maximum allowed delivery speed of 6 m/sec - The RED values entail speeds higher than 6 m/sec - The Values with GREY background indicate NPSH-R > 5m values.
For installations in HHS-HHP systems, contact our technical department. Nominal hydraulic characteristics of flow rate and head at the pump inlet, with performance tolerances according to UNI EN ISO 9906:2012 Grade 3B

EUROFIRE WITH ELECTRIC PUMP 50-160
UNI EN 12845

CENTRIFUGAL PUMP

COUPLING JOINT

Pump-motor connection via a spacer flexible coupling complete with accident prevention casing UNI EN 12845 10.1

KEY

NID	Nom. Intake Diameter
NDD	Nom. Delivery Diameter
NCD	Nom. Column Diameter
NS	Negative suction head set-up
PS	Positive suction head set-up
AD	Only found in the Negative suction head version **NS**

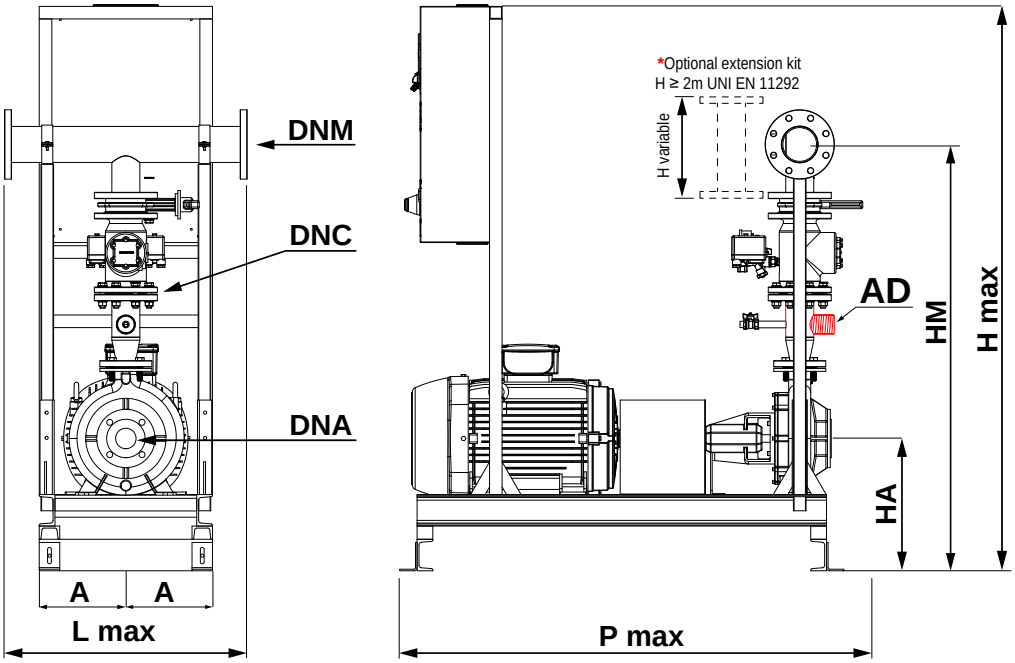

* H rise optional extension ≥ 2m

DIMENSIONS AND WEIGHTS OF EUROFIRE WITH ELECTRIC PUMPS 50-160

Jockey pumps on page 39

Q max	PRODUCT CODE 50-160					Power Pump	NID.	DNM	HA	HM		A	H max	L max	P max	Weight
										SP	ST					
m³/h	COMP..	ID Pump	DNC		HYDRAULIC CONFIG.	kW Electrical	Ø	Ø	mm	mm	mm	mm	mm	mm	mm	kg
≤ 70	GC0E0	192	065	D	/NS - /PS	7.5	65	80	352	1218*	1108*	250	1790	710	1140	346
	GC0E0	194	065	D	/NS - /PS	11	65	80	352	1218*	1108*	220	1790	710	1340	401
> 70	GC0E0	192	080	E	/NS - /PS	7.5	65	100	352	1242*	1132*	250	1790	770	1140	356
	GC0E0	194	080	E	/NS - /PS	11	65	100	352	1242*	1132*	220	1790	770	1340	411

Fire-fighting units catalogue - Edition: September-2021

EUROFIRE WITH ELECTRIC PUMP 50-200
UNI EN 12845

PRO ELECTRIC

GSM

PERFORMANCE RANGE

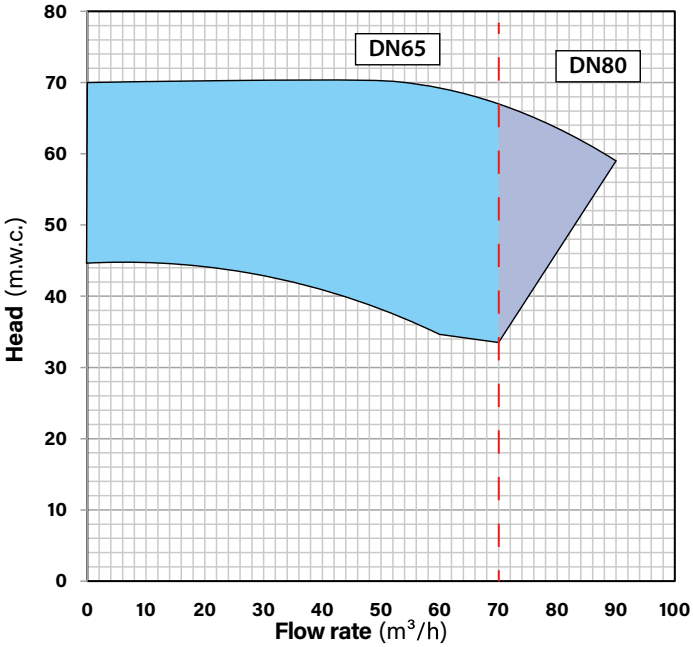

CENTRIFUGAL PUMP

END SUCTION normalised single-impeller centrifuge with **BACK PULL OUT** horizontal shaft, with a spiral diffuser and separate support; axial intake and radial delivery UNI EN 12845 10.1

- Pump body and impeller: EN GJL 250 cast iron
- Shaft: AISI 431 Stainless Steel
- Mechanical seal: Ceramic-Graphite

MOTOR

Three-phase asynchronous closed externally self-ventilated with cage rotor Power calculated based on the power absorbed at the point of the characteristic curve which corresponds to a **NPSH of 16 m UNI EN 12845:2020 10.1**

HYDRAULIC PUMPS 50-200 EFFICIENCY

Diesel Version page 112

Pump Model	Pump ID	Motor		Pump Fittings			Flow Rate - m³/h										
		Electrical	Diesel	Intake	Delivery												
		kW	kW	Ø	Ø		0	10	20	30	40	50	60	70	80	90	100
50-200/1	200	11	10.5	65	50	H (mwc)	45	45	44.5	43.5	42.5	40	35				
50-200/2	205	15	12.8	65	50		51	51	50.5	50	48.5	45	40.5	33.5			
50-200/3	210	15	17.5	65	50		58	58	58	58	56	53	50				
50-200/6	215	18.5	17.5	65	50		61	61	60.5	59	57.5	55.5	53	49.5			
50-200/4	220	22	25.2	65	50		67.5	67.5	67	66	64.5	62.5	60.5	58	54		
50-200/5	230	22	25.2	65	50		70	70	70	70	70	70	69	66.5	63	59	

The values to the left of the reference refer to the maximum allowed delivery speed of 6 m/sec - The RED values entail speeds higher than 6 m/sec - The Values with GREY background indicate NPSH-R > 5m values.
For installations in HHS-HHP systems, contact our technical department. Nominal hydraulic characteristics of flow rate and head at the pump inlet, with performance tolerances according to UNI EN ISO 9906:2012 Grade 3B

EUROFIRE WITH ELECTRIC PUMP 50-200
UNI EN 12845

CENTRIFUGAL PUMP

COUPLING JOINT

Pump-motor connection via a spacer flexible coupling complete with accident prevention casing UNI EN 12845 10.1

KEY

NID	Nom. Intake Diameter
NDD	Nom. Delivery Diameter
NCD	Nom. Column Diameter
NS	Negative suction head set-up
PS	Positive suction head set-up
AD	Only found in the Negative suction head version **NS**

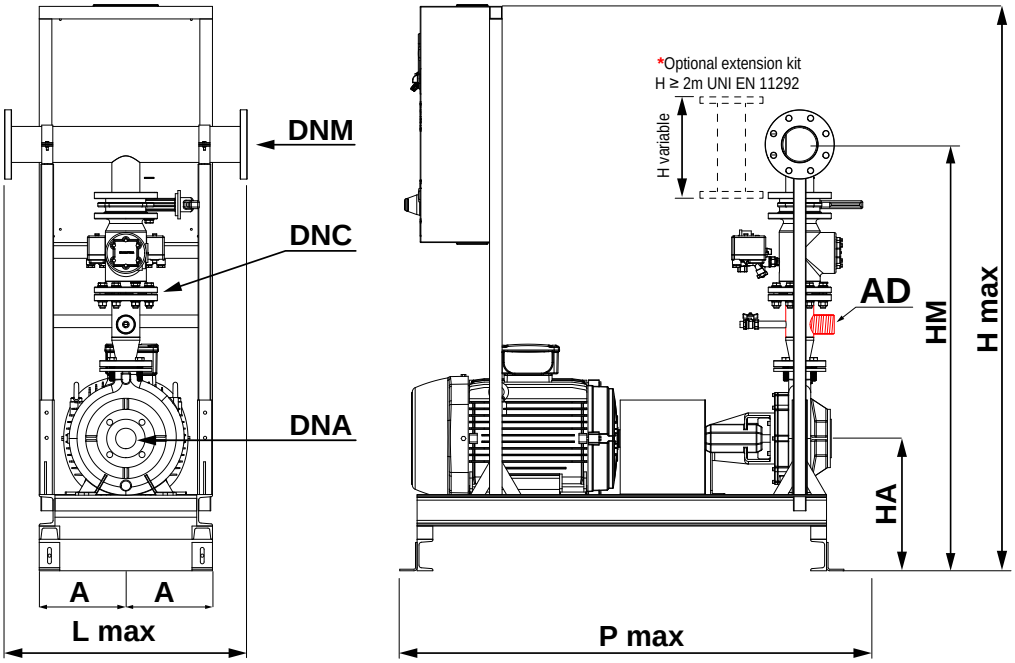

* H rise optional extension ≥ 2m

DIMENSIONS AND WEIGHTS OF EUROFIRE WITH ELECTRIC PUMPS 50-200

Jockey pumps on page 39

Q max	PRODUCT CODE 50-200					Power Pump	NID.	DNM	HA	HM		A	H max	L max	P max	Weight
										SP	ST					
m³/h	COMP..	ID Pump	DNC		HYDRAULIC CONFIG.	kW Electrical	Ø	Ø	mm	mm	mm	mm	mm	mm	mm	kg
≤ 70	GC0E0	200	065	D	/NS - /PS	11	65	80	352	1238*	1128*	220	1790	710	1340	469
	GC0E0	205-210	065	D	/NS - /PS	15	65	80	352	1238*	1128*	220	1790	710	1340	469
	GC0E0	215	065	D	/NS - /PS	18.5	65	80	420	1306*	1196*	295	1790	710	1340	469
	GC0E0	220-230	065	D	/NS - /PS	22	65	80	420	1306*	1196*	250	1792	710	1340	469
> 70	GC0E0	200	080	E	/NS - /PS	11	65	100	352	1262*	1152*	220	1790	770	1340	509
	GC0E0	205-210	080	E	/NS - /PS	15	65	100	352	1262*	1152*	220	1790	770	1340	509
	GC0E0	215	080	E	/NS - /PS	18.5	65	100	420	1330*	1220*	295	1790	770	1340	509
	GC0E0	220-230	080	E	/NS - /PS	22	65	100	420	1330*	1220*	250	1792	770	1340	509

Fire-fighting units catalogue - Edition: September-2021

EUROFIRE WITH ELECTRIC PUMP 50-250
UNI EN 12845

PRO ELECTRIC

GSM

PERFORMANCE RANGE

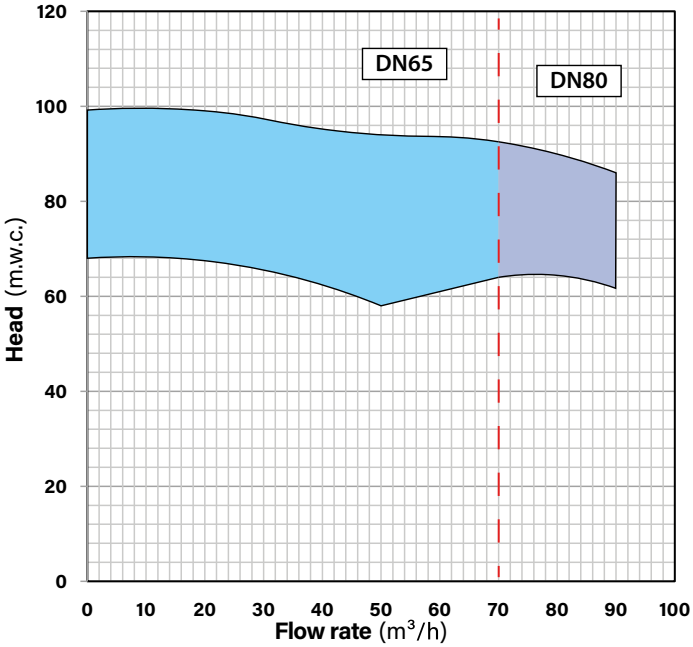

CENTRIFUGAL PUMP

END SUCTION normalised single-impeller centrifuge with **BACK PULL OUT** horizontal shaft, with a spiral diffuser and separate support; axial intake and radial delivery UNI EN 12845 10.1

- Pump body and impeller: EN GJL 250 cast iron
- Shaft: AISI 431 Stainless Steel
- Mechanical seal: Ceramic-Graphite

MOTOR

Three-phase asynchronous closed externally self-ventilated with cage rotor Power calculated based on the power absorbed at the point of the characteristic curve which corresponds to a **NPSH of 16 m UNI EN 12845:2020 10.1**

HYDRAULIC PUMPS 50-250 EFFICIENCY

Diesel Version page 114

Pump Model	Pump ID	Motor		Pump Fittings			Flow Rate - m³/h										
		Electrical	Diesel	Intake	Delivery												
		kW	kW	Ø	Ø		0	10	20	30	40	50	60	70	80	90	100
50-250/8	240	18.5	25.2	65	50	H (mwc)	68.5	68	67.5	66	63	58					
50-250/3	250	22	25.2	65	50		77	76.5	75.5	74	72	70	67.5	64			
50-250/9	255	22	25.2	65	50		78	77.5	76.5	75	72	68	62				
50-250/5	242	30	25.2	65	50		89	88	87	86.5	85	83	80	76	70.5		
50-250/11	243	30	25.2	65	50		87	86.5	86	85.5	85	83.5	80	76	72	70	
50-250/6	260	30	25.2	65	50		94.5	94	93.5	93	91.5	88.5	84	76			
50-250/13	267	30	25.2	65	50		72	72	72	72	72	72	72	68	66	62	
50-250/7	270	30	36.5	65	50		98	97.5	97	95.5	94	92.5	90	86.5	81		
50-250/10	265	30	36.5	65	50		99	98.7	98.5	96.7	95	92	86	80			
50-250/12	266	37	36.5	65	50		94	94	94	94	94	94	93	92	90	86	

The values to the left of the reference refer to the maximum allowed delivery speed of 6 m/sec - The RED values entail speeds higher than 6 m/sec - The Values with GREY background indicate NPSH-R > 5m values.
For installations in HHS-HHP systems, contact our technical department. Nominal hydraulic characteristics of flow rate and head at the pump inlet, with performance tolerances according to UNI EN ISO 9906:2012 Grade 3B

EUROFIRE WITH ELECTRIC PUMP 50-250
UNI EN 12845

CENTRIFUGAL PUMP

COUPLING JOINT

Pump-motor connection via a spacer flexible coupling complete with accident prevention casing UNI EN 12845 10.1

KEY

NID	Nom. Intake Diameter
NDD	Nom. Delivery Diameter
NCD	Nom. Column Diameter
NS	Negative suction head set-up
PS	Positive suction head set-up
AD	Only found in the Negative suction head version **NS**

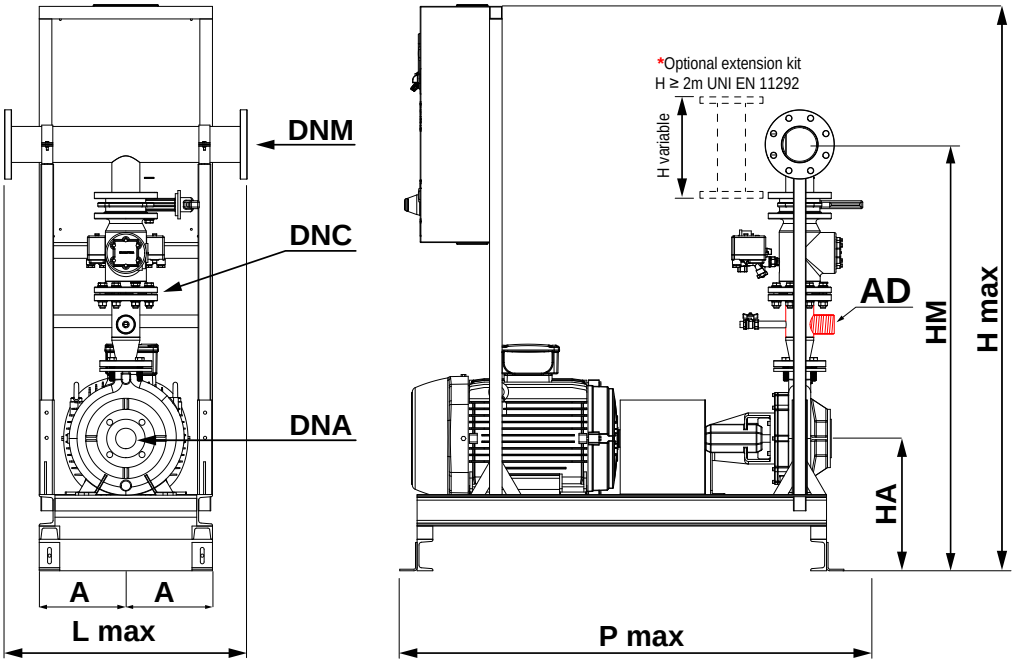

* H rise optional extension ≥ 2m

DIMENSIONS AND WEIGHTS OF EUROFIRE WITH ELECTRIC PUMPS 50-250

Jockey pumps on page 39

Q max	PRODUCT CODE 50-250					Power Pump	NID.	DNM	HA	HM		A	H max	L max	P max	Weight
										SP	ST					
m³/h	COMP..	ID Pump	DNC		HYDRAULIC CONFIG.	kW Electrical	Ø	Ø	mm	mm	mm	mm	mm	mm	mm	kg
≤ 70	GC0E0	240	065	D	/NS - /PS	18.5	65	80	420	1331*	1221*	250	1792	710	1340	441
	GC0E0	250-255	065	D	/NS - /PS	22	65	80	420	1331*	1221*	250	1792	710	1340	476
	GC0E0	242-243-260-265-270	065	D	/NS - /PS	30	65	80	420	1331*	1221*	275	1792	710	1440	537
	GC0E0	266	065	D	/NS - /PS	37	65	80	420	1331*	1221*	250	1792	710	1340	537
> 70	GC0E0	240	080	E	/NS - /PS	18.5	65	100	420	1355*	1245*	250	1792	770	1340	481
	GC0E0	250-255	080	E	/NS - /PS	22	65	100	420	1355*	1245*	250	1792	770	1340	516
	GC0E0	242-243-260-265-270	080	E	/NS - /PS	30	65	100	420	1355*	1245*	275	1792	770	1440	577
	GC0E0	266	080	E	/NS - /PS	37	65	100	420	1355*	1245*	250	1792	770	1340	577

Fire-fighting units catalogue - Edition: September-2021

EUROFIRE WITH ELECTRIC PUMP 50-315
UNI EN 12845

PRO ELECTRIC

GSM

PERFORMANCE RANGE

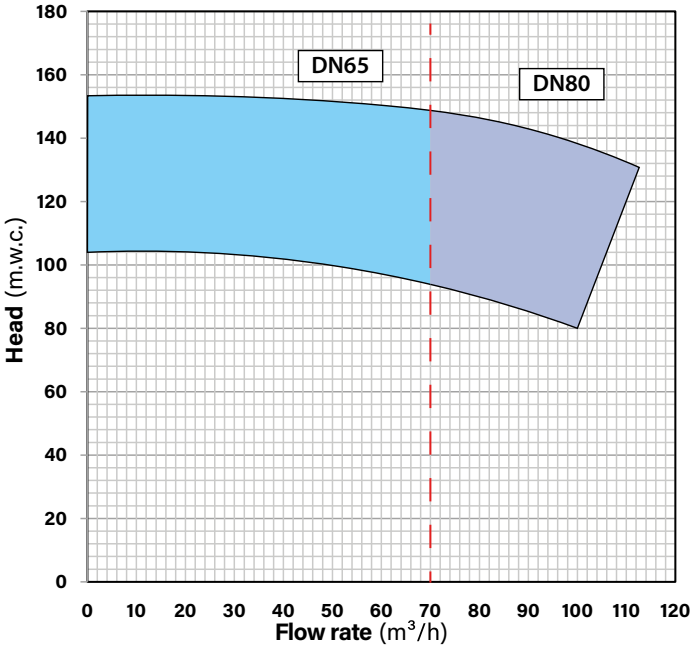

CENTRIFUGAL PUMP

END SUCTION normalised single-impeller centrifuge with **BACK PULL OUT** horizontal shaft, with a spiral diffuser and separate support; axial intake and radial delivery UNI EN 12845 10.1

- Pump body and impeller: EN GJL 250 cast iron
- Shaft: AISI 431 Stainless Steel
- Mechanical seal: Ceramic-Graphite

MOTOR

Three-phase asynchronous closed externally self-ventilated with cage rotor Power calculated based on the power absorbed at the point of the characteristic curve which corresponds to a **NPSH of 16 m UNI EN 12845:2020 10.1**

HYDRAULIC PUMPS 50-315 EFFICIENCY

Diesel Version page 116

Pump Model	Pump ID	Motor		Pump Fittings			Flow Rate - m³/h											
		Electrical	Diesel	Intake	Delivery													
		kW	kW	Ø	Ø		0	10	20	30	40	50	60	70	80	90	100	110
50-315/2	269	45	47.7	80	50	H (mwc)	104	103.5	103	102.5	101.5	100	97.5	94	90	85	80	
50-315/3	273	45	47.7	65	50		121	121	120.5	120	119	118	116	113	110	106	100	90
50-315/5	271	55	47.7	65	50		126	125.5	125	124.5	123.5	122	120.5	118	115	111	105	97.5
50-315/6	277	55	66	80	50		120	119.5	119	118	116	114	111	108	104	100	95.5	
50-315/7	272	55	66	65	50		136	136	135.5	135	134	133.5	132.5	130	127	123	118	112
50-315/8	275	75	66	80	50		131	131	130.5	130	129	127	124.5	121	117.5	113	108	
50-315/9	278	75	66	65	50		153	153	152.5	152	151.5	151	150	148	145	142	138	132

The values to the left of the reference refer to the maximum allowed delivery speed of 6 m/sec - The RED values entail speeds higher than 6 m/sec - The Values with GREY background indicate NPSH-R > 5m values.
For installations in HHS-HHP systems, contact our technical department. Nominal hydraulic characteristics of flow rate and head at the pump inlet, with performance tolerances according to UNI EN ISO 9906:2012 Grade 3B

EUROFIRE WITH ELECTRIC PUMP 50-315
UNI EN 12845

CENTRIFUGAL PUMP

COUPLING JOINT

Pump-motor connection via a spacer flexible coupling complete with accident prevention casing UNI EN 12845 10.1

KEY

NID	Nom. Intake Diameter
NDD	Nom. Delivery Diameter
NCD	Nom. Column Diameter
NS	Negative suction head set-up
PS	Positive suction head set-up
AD	Only found in the Negative suction head version **NS**

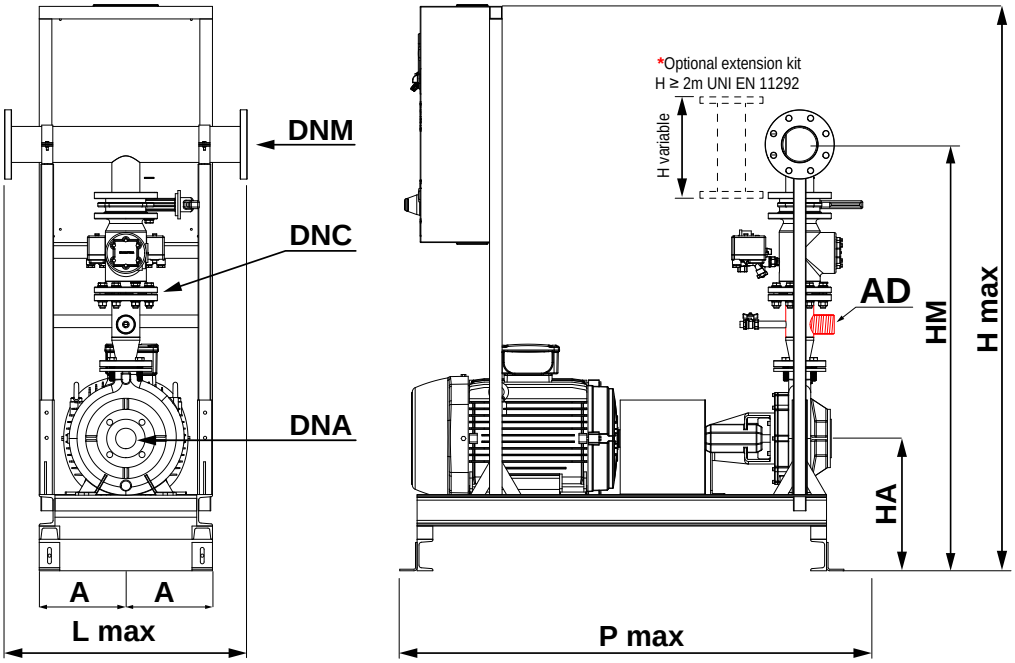

* H rise optional extension ≥ 2m

DIMENSIONS AND WEIGHTS OF EUROFIRE WITH ELECTRIC PUMPS 50-315

Jockey pumps on page 39

Q max	PRODUCT CODE 50-315					Power Pump	NID.	DNM	HA	HM SP	HM ST	A	H max	L max	P max	Weight
m³/h	COMP..	ID Pump	DNC		HYDRAULIC CONFIG.	kW Electrical	Ø	Ø	mm	mm	mm	mm	mm	mm	mm	kg
≤ 70	GC0E0	269-273	065	D	/NS - /PS	45	65	80	420	1386*	1276*	300	1790	710	1690	770
	GC0E0	271-272-277	065	D	/NS - /PS	55	65	80	420	1386*	1276*	370	1890	740	1890	727
	GC0E0	275-278	065	D	/NS - /PS	75	65	80	420	1386*	1276*	400	1790	800	1940	880
> 70	GC0E0	269-273	080	E	/NS - /PS	45	65	100	420	1410*	1300*	300	1790	770	1690	687
	GC0E0	271-272-277	080	E	/NS - /PS	55	65	100	420	1410*	1300*	370	1890	770	1890	767
	GC0E0	275-278	080	E	/NS - /PS	75	65	100	420	1410*	1300*	400	1790	800	1940	920

Fire-fighting units catalogue - Edition: September-2021

EUROFIRE WITH ELECTRIC PUMP 65-200
UNI EN 12845

EPRO ELECTRIC

GSM

PERFORMANCE RANGE

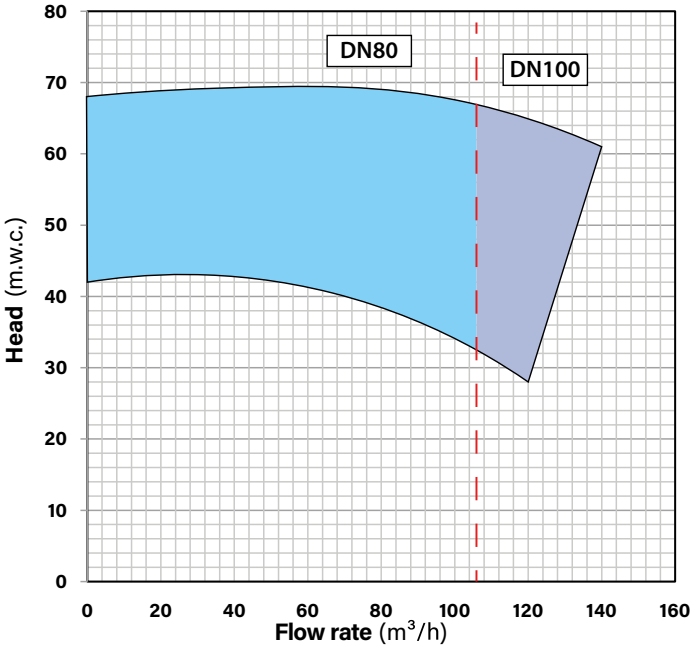

CENTRIFUGAL PUMP

END SUCTION normalised single-impeller centrifuge with **BACK PULL OUT** horizontal shaft, with a spiral diffuser and separate support; axial intake and radial delivery UNI EN 12845 10.1

- Pump body and impeller: EN GJL 250 cast iron
- Shaft: AISI 431 Stainless Steel
- Mechanical seal: Ceramic-Graphite

MOTOR

Three-phase asynchronous closed externally self-ventilated with cage rotor Power calculated based on the power absorbed at the point of the characteristic curve which corresponds to a **NPSH of 16 m UNI EN 12845:2020 10.1**

HYDRAULIC PUMPS 65-200 EFFICIENCY

Diesel Version page 118

Pump Model	Pump ID	Motor		Pump Fittings			Flow Rate - m³/h								
		Electrical	Diesel	Intake	Delivery										
		kW	kW	Ø	Ø		0	20	40	60	80	100	120	140	160
65-200/1	283	15	17.5	80	65	H (mwc)	42.5	42.5	42.5	41	38.5	34	28		
65-200/9	274	18.5	17.5	80	65		43	43.5	44	43.5	41				
65-200/10	280	22	25.2	80	65		49	49.5	50	49.5	48				
65-200/13	284	30	25.2	80	65		48	48	48	48	46	42	37.5	35.5	
65-200/11	290	30	25.2	80	65		62.5	63.5	64	64	61.5	57.5	51.5		
65-200/6	296	30	25.2	80	65		54.5	54	53.5	53	51	48.5	44.5		
65-200/8	295	30	36.5	80	65		60	59.5	59.5	59	57	54.5	51	47	
65-200/12	300	30	36.5	80	65		65	66	67	66.5	64	60.5	55.5		
65-200/5	285	37	36.5	80	65		68	68.5	69	69	68.5	67.5	65	61	

The values to the left of the reference refer to the maximum allowed delivery speed of 6 m/sec - The RED values entail speeds higher than 6 m/sec - The Values with GREY background indicate NPSH-R > 5m values.
For installations in HHS-HHP systems, contact our technical department. Nominal hydraulic characteristics of flow rate and head at the pump inlet, with performance tolerances according to UNI EN ISO 9906:2012 Grade 3B

EUROFIRE WITH ELECTRIC PUMP 65-200
UNI EN 12845

CENTRIFUGAL PUMP

COUPLING JOINT

Pump-motor connection via a spacer flexible coupling complete with accident prevention casing UNI EN 12845 10.1

KEY

NID	Nom. Intake Diameter
NDD	Nom. Delivery Diameter
NCD	Nom. Column Diameter
NS	Negative suction head set-up
PS	Positive suction head set-up
AD	Only found in the Negative suction head version **NS**

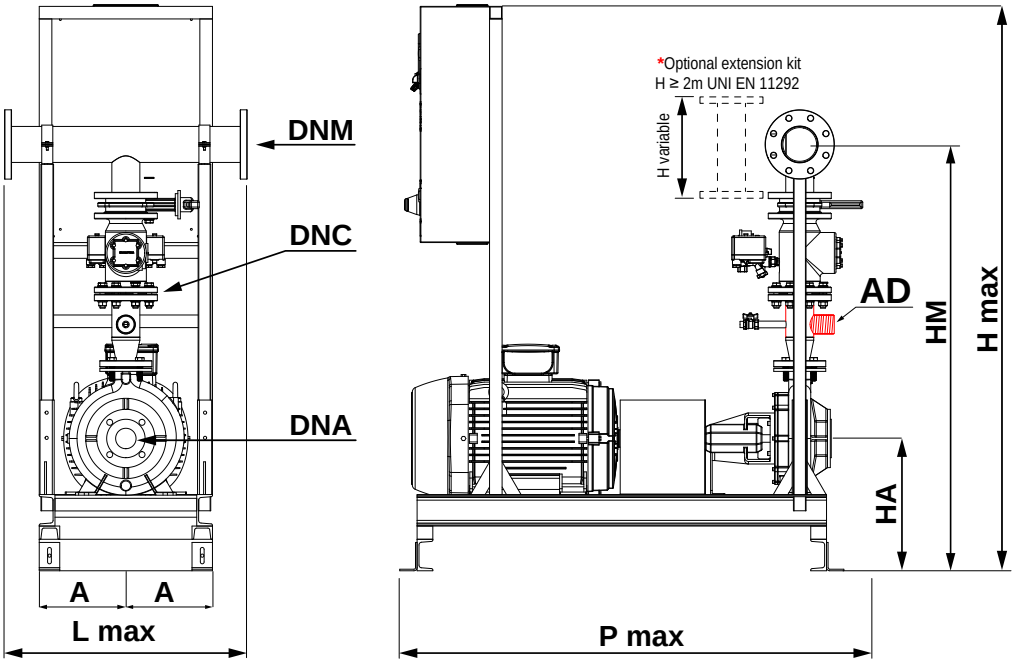

* H rise optional extension ≥ 2m

DIMENSIONS AND WEIGHTS OF EUROFIRE WITH ELECTRIC PUMPS 65-200

Jockey pumps on page 39

Q max	PRODUCT CODE 65-200					Power Pump	NID.	DNM	HA	HM SP	HM ST	A	H max	L max	P max	Weight
m³/h	COMP..	ID Pump	DNC		HYDRAULIC CONFIG.	kW Electrical	Ø	Ø	mm	mm	mm	mm	mm	mm	mm	kg
≤ 105	GC0E0	283	080	E	/NS - /PS	15	80	100	420	1354*	1245*	270	1792	770	1340	461
	GC0E0	274	080	E	/NS - /PS	18.5	80	100	420	1354*	1245*	250	1792	770	1340	478
	GC0E0	280	080	E	/NS - /PS	22	80	100	420	1354*	1245*	250	1792	770	1340	513
	GC0E0	284-290-295-296-300	080	E	/NS - /PS	30	80	100	420	1354*	1245*	275	1792	770	1440	574
	GC0E0	285	080	E	/NS - /PS	37	80	100	420	1354*	1245*	275	1792	770	1590	700
> 105	GC0E0	283	100	F	/NS - /PS	15	80	125	420	1486*	1343*	270	1792	870	1340	531
	GC0E0	274	100	F	/NS - /PS	18.5	80	125	420	1486*	1343*	250	1792	870	1340	531
	GC0E0	280	100	F	/NS - /PS	22	80	125	420	1486*	1343*	250	1792	870	1340	583
	GC0E0	284-290-295-296-300	100	F	/NS - /PS	30	80	125	420	1486*	1343*	275	1792	870	1440	644
	GC0E0	285	100	F	/NS - /PS	37	80	125	420	1486*	1343*	275	1792	870	1590	700

The technical data are not binding and can be modified without prior notice | The images are indicative and not binding

EUROFIRE WITH ELECTRIC PUMP 65-250
UNI EN 12845

PERFORMANCE RANGE

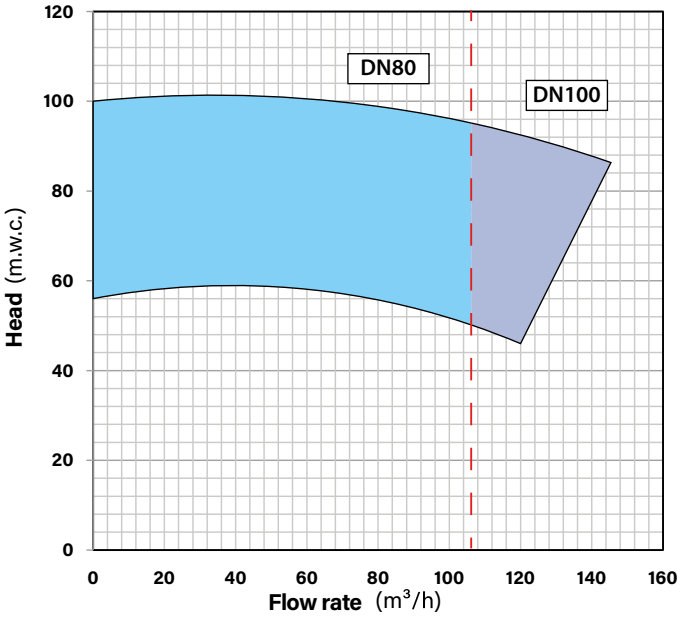

PRO ELECTRIC

GSM

CENTRIFUGAL PUMP

END SUCTION normalised single-impeller centrifuge with **BACK PULL OUT** horizontal shaft, with a spiral diffuser and separate support; axial intake and radial delivery UNI EN 12845 10.1

- Pump body and impeller: EN GJL 250 cast iron
- Shaft: AISI 431 Stainless Steel
- Mechanical seal: Ceramic-Graphite

MOTOR

Three-phase asynchronous closed externally self-ventilated with cage rotor Power calculated based on the power absorbed at the point of the characteristic curve which corresponds to a **NPSH of 16 m UNI EN 12845:2020 10.1**

HYDRAULIC PUMPS 65-250 EFFICIENCY

Diesel Version page 120

Pump Model	Pump ID	Motor		Pump Fittings			Flow Rate - m³/h								
		Electrical	Diesel	Intake	Delivery										
		kW	kW	Ø	Ø		0	20	40	60	80	100	120	140	160
65-250/13	267	30	25.2	80	65	H (mwc)	57	59	60	58	56	52	46		
65-250/6	320	30	36.5	80	65		70	71	71.5	70	67	62.5			
65-250/12	325	37	36.5	80	65		73	74	73	72	70	66			
65-250/3	335	37	36.5	80	65		75	74.5	74.5	74	73	70	65	58.5	
65-250/7	330	37	36.5	80	65		82	82	81.5	80	77.5	73.5			
65-250/4	352	45	47.7	80	65		95	95	95	95	94	92.5	87	81	
65-250/8	340	45	47.7	80	65		92	92	92	91	88.5	85			
65-250/9	345	45	47.7	80	65		84	83.5	83	82	81	79	76	71	
65-250/10	350	55	47.7	80	65		95	95.5	96	94.5	92	83			
65-250/14	326	55	66	80	65		100	100	100	99.5	98	97	93	87.5	
65-250/11	348	55	66	80	65		98	99	99.5	98	95	91			

The values to the left of the reference refer to the maximum allowed delivery speed of 6 m/sec - The RED values entail speeds higher than 6 m/sec - The Values with GREY background indicate NPSH-R > 5m values.
For installations in HHS-HHP systems, contact our technical department. Nominal hydraulic characteristics of flow rate and head at the pump inlet, with performance tolerances according to UNI EN ISO 9906:2012 Grade 3B

EUROFIRE WITH ELECTRIC PUMP 65-250
UNI EN 12845

CENTRIFUGAL PUMP

COUPLING JOINT

Pump-motor connection via a spacer flexible coupling complete with accident prevention casing UNI EN 12845 10.1

KEY

NID	Nom. Intake Diameter
NDD	Nom. Delivery Diameter
NCD	Nom. Column Diameter
NS	Negative suction head set-up
PS	Positive suction head set-up
AD	Only found in the Negative suction head version **NS**

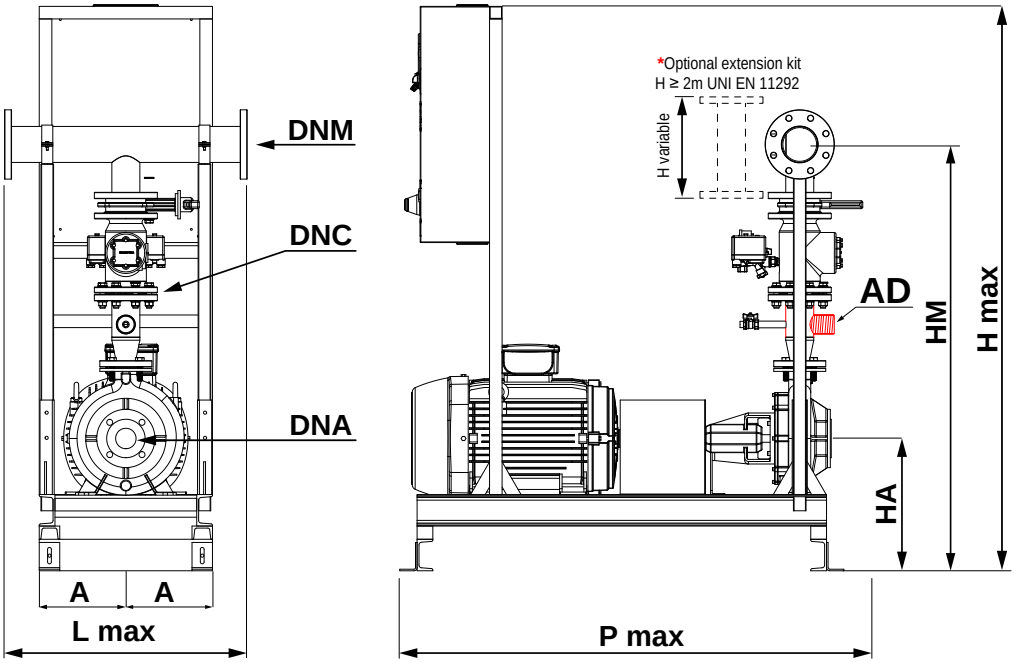

* H rise optional extension ≥ 2m

DIMENSIONS AND WEIGHTS OF EUROFIRE WITH ELECTRIC PUMPS 65-250

Jockey pumps on page 39

Q max	PRODUCT CODE 65-250					Power Pump	NID.	DNM	HA	HM		A	H max	L max	P max	Weight
										SP	ST					
m³/h	COMP..	ID Pump	DNC		HYDRAULIC CONFIG.	kW Electrical	Ø	Ø	mm	mm	mm	mm	mm	mm	mm	kg
≤ 105	GC0E0	267-320	080	E	/NS - /PS	30	80	100	420	1379*	1270*	300	1790	770	1590	601
	GC0E0	325-330-335	080	E	/NS - /PS	37	80	100	420	1379*	1270*	300	1790	770	1690	620
	GC0E0	340-345-352	080	E	/NS - /PS	45	80	100	420	1379*	1270*	340	1790	770	1690	678
	GC0E0	326-348-350	080	E	/NS - /PS	55	80	100	420	1379*	1270*	325	1790	770	1710	758
> 105	GC0E0	267-320	100	F	/NS - /PS	30	80	125	420	1511*	1368*	300	1790	870	1590	671
	GC0E0	325-330-335	100	F	/NS - /PS	37	80	125	420	1511*	1368*	300	1790	870	1690	690
	GC0E0	340-345-352	100	F	/NS - /PS	45	80	125	420	1511*	1368*	340	1790	870	1690	748
	GC0E0	326-348-350	100	F	/NS - /PS	55	80	125	420	1511*	1368*	325	1790	870	1710	828

Fire-fighting units catalogue - Edition: September-2021

EUROFIRE WITH ELECTRIC PUMP 65-315
UNI EN 12845

PRO ELECTRIC

GSM

PERFORMANCE RANGE

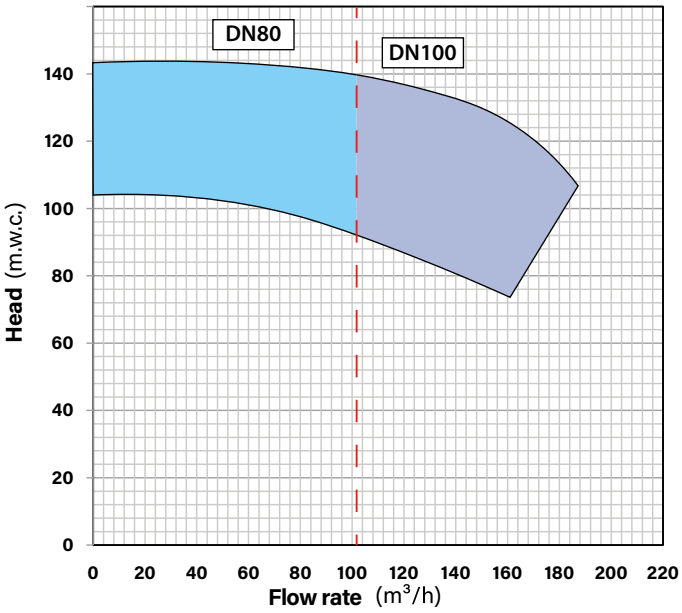

CENTRIFUGAL PUMP

END SUCTION normalised single-impeller centrifuge with **BACK PULL OUT** horizontal shaft, with a spiral diffuser and separate support; axial intake and radial delivery UNI EN 12845 10.1

- Pump body and impeller: EN GJL 250 cast iron
- Shaft: AISI 431 Stainless Steel
- Mechanical seal: Ceramic-Graphite

MOTOR

Three-phase asynchronous closed externally self-ventilated with cage rotor Power calculated based on the power absorbed at the point of the characteristic curve which corresponds to a **NPSH of 16 m UNI EN 12845:2020 10.1**

HYDRAULIC PUMPS 65-315 EFFICIENCY

Diesel Version page 122

Pump Model	Pump ID	Motor		Pump Fittings			Flow Rate - m³/h											
		Electrical	Diesel	Intake	Delivery													
		kW	kW	Ø	Ø		0	20	40	60	80	100	120	140	160	180	200	220
65-315/1	353	55	66	80	65	H (mwc)	105	104.5	104	103	101	98	93	85	74			
65-315/2	356	75	66	80	65		118	118	117	116	114	110	106	100	92			
65-315/3	354	90	102	80	65		143	143	142.5	142	141	140	136.5	132	126			
65-315/7	355	75	102	80	65		128	127.5	127	126	124	122	120	114	108	97	72	

The values to the left of the reference refer to the maximum allowed delivery speed of 6 m/sec - The RED values entail speeds higher than 6 m/sec - The Values with GREY background indicate NPSH-R > 5m values.
For installations in HHS-HHP systems, contact our technical department. Nominal hydraulic characteristics of flow rate and head at the pump inlet, with performance tolerances according to UNI EN ISO 9906:2012 Grade 3B

EUROFIRE WITH ELECTRIC PUMP 65-315
UNI EN 12845

CENTRIFUGAL PUMP

COUPLING JOINT

Pump-motor connection via a spacer flexible coupling complete with accident prevention casing UNI EN 12845 10.1

KEY

NID	Nom. Intake Diameter
NDD	Nom. Delivery Diameter
NCD	Nom. Column Diameter
NS	Negative suction head set-up
PS	Positive suction head set-up
AD	Only found in the Negative suction head version **NS**

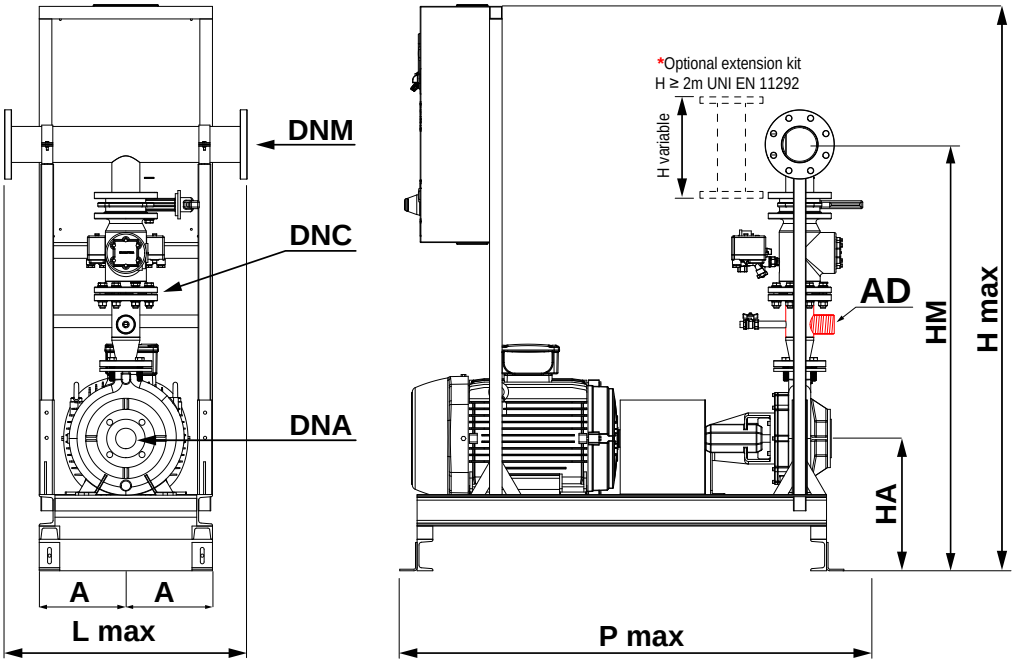

* H rise optional extension ≥ 2m

DIMENSIONS AND WEIGHTS OF EUROFIRE WITH ELECTRIC PUMPS 65-315

Jockey pumps on page 39

Q max	PRODUCT CODE 65-315					Power Pump	NID.	DNM	HA	HM		A	H max	L max	P max	Weight
										SP	ST					
m³/h	COMP..	ID Pump	DNC		HYDRAULIC CONFIG.	kW Electrical	Ø	Ø	mm	mm	mm	mm	mm	mm	mm	kg
≤ 105	GC0E0	353	080	E	/NS - /PS	55	80	100	470	1459*	1350*	405	1770	810	1949	601
	GC0E0	355-356	080	E	/NS - /PS	75	80	100	470	1459*	1350*	405	1770	810	1990	620
	GC0E0	354	080	E	/NS - /PS	90	80	100	470	1459*	1350*	395	2190	790	1830	758
> 105	GC0E0	353	100	F	/NS - /PS	55	80	125	470	1591*	1448*	405	1770	870	1949	671
	GC0E0	355-356	100	F	/NS - /PS	75	80	125	470	1591*	1448*	405	1770	870	1990	690
	GC0E0	354	100	F	/NS - /PS	90	80	125	470	1591*	1448*	395	2190	870	1830	828

Fire-fighting units catalogue - Edition: September-2021

EUROFIRE WITH ELECTRIC PUMP 80-200
UNI EN 12845

PRO ELECTRIC

GSM

PERFORMANCE RANGE

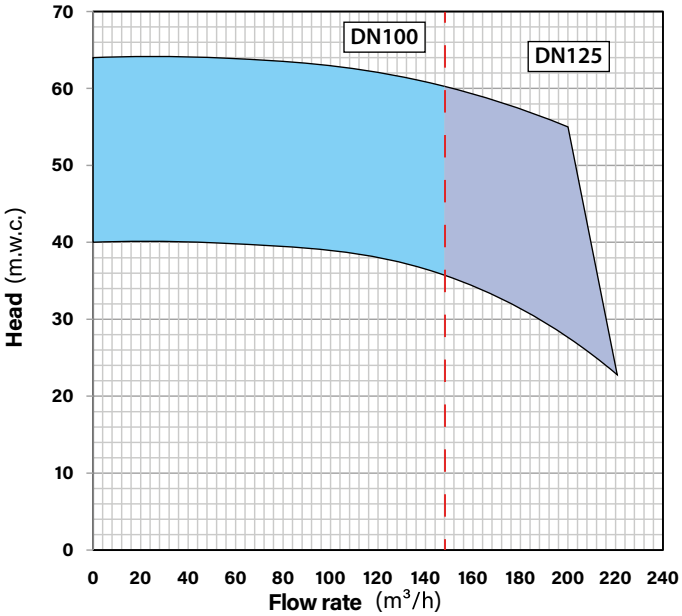

CENTRIFUGAL PUMP

END SUCTION normalised single-impeller centrifuge with **BACK PULL OUT** horizontal shaft, with a spiral diffuser and separate support; axial intake and radial delivery UNI EN 12845 10.1

- Pump body and impeller: EN GJL 250 cast iron
- Shaft: AISI 431 Stainless Steel
- Mechanical seal: Ceramic-Graphite

MOTOR

Three-phase asynchronous closed externally self-ventilated with cage rotor Power calculated based on the power absorbed at the point of the characteristic curve which corresponds to a **NPSH of 16 m UNI EN 12845:2020 10.1**

HYDRAULIC PUMPS 80-200 EFFICIENCY

Diesel Version page 124

Pump Model	Pump ID	Motor		Pump Fittings			Flow Rate - m³/h										
		Electrical	Diesel	Intake	Delivery												
		kW	kW	Ø	Ø		0	50	80	100	120	140	160	180	200	220	240
80-200/1	358	22	25.2	100	80	H (mwc)	40	40	39.5	39	38	36.5	34.5	31.5	27.5	23.5	
80-200/10	362	30	25.2	100	80		50	49	47.5	46.5	45	43	41	39	36	31.5	
80-200/3	357	30	36.5	100	80		51	51	50	49	48	47	45	42.5	39	35.5	
80-200/8	367	30	36.5	100	80		53	52.5	51	50	49	47	45	43	40		
80-200/6	360	37	36.5	100	80		57.5	57	56.5	55.5	54	52	50	48	45		
80-200/7	365	45	47.7	100	80		63	63.5	63	63	61.5	60	58	56	53.5		
80-200/9	370	45	47.7	100	80		64	63.5	63	62.5	62	60.5	59	57	55		

The values to the left of the reference refer to the maximum allowed delivery speed of 6 m/sec - The RED values entail speeds higher than 6 m/sec - The Values with GREY background indicate NPSH-R > 5m values.
For installations in HHS-HHP systems, contact our technical department. Nominal hydraulic characteristics of flow rate and head at the pump inlet, with performance tolerances according to UNI EN ISO 9906:2012 Grade 3B

EUROFIRE WITH ELECTRIC PUMP 80-200
UNI EN 12845

CENTRIFUGAL PUMP

COUPLING JOINT

Pump-motor connection via a spacer flexible coupling complete with accident prevention casing UNI EN 12845 10.1

KEY

NID	Nom. Intake Diameter
NDD	Nom. Delivery Diameter
NCD	Nom. Column Diameter
NS	Negative suction head set-up
PS	Positive suction head set-up
AD	Only found in the Negative suction head version **NS**

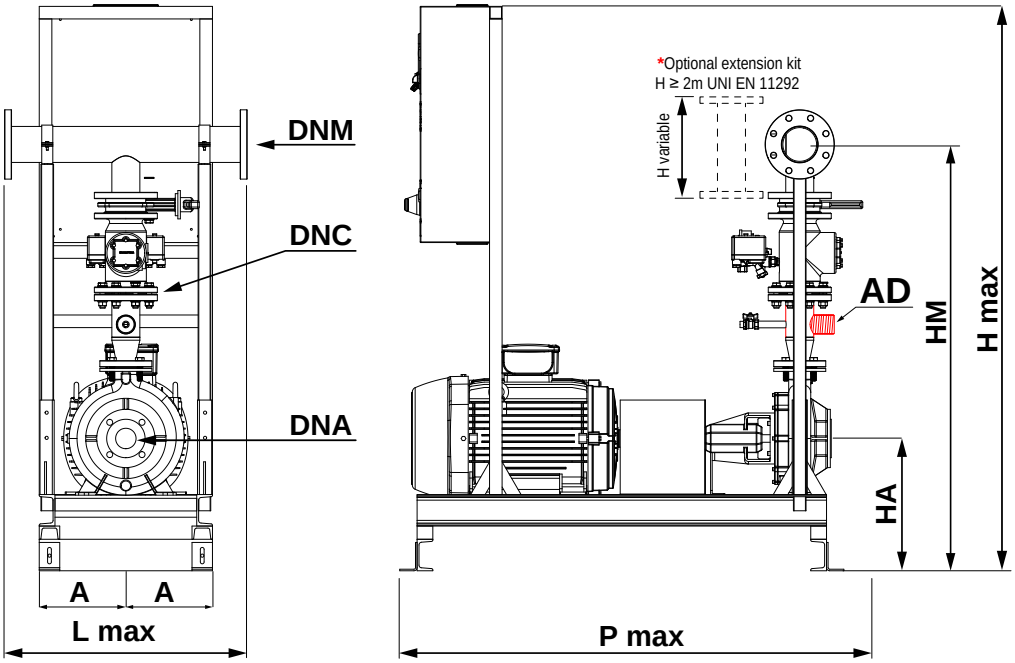

* H rise optional extension ≥ 2m

DIMENSIONS AND WEIGHTS OF EUROFIRE WITH ELECTRIC PUMPS 80-200

Jockey pumps on page 39

Q max	PRODUCT CODE 80-200					Power Pump	NID.	DNM	HA	HM		A	H max	L max	P max	Weight
										SP	ST					
m³/h	COMP..	ID Pump	DNC		HYDRAULIC CONFIG.	kW Electrical	Ø	Ø	mm	mm	mm	mm	mm	mm	mm	kg
≤ 150	GC0E0	358	100	F	/NS - /PS	22	100	125	420	1512*	1368*	295	1792	870	1640	664
	GC0E0	357-362-367	100	F	/NS - /PS	30	100	125	420	1512*	1368*	345	1790	870	1690	664
	GC0E0	360	100	F	/NS - /PS	37	100	125	420	1512*	1368*	300	1790	870	1690	683
	GC0E0	365-370	100	F	/NS - /PS	45	100	125	420	1512*	1368*	300	1790	870	1790	741
> 150	GC0E0	358	125	G	/NS - /PS	22	100	150	420	1617*	1472*	295	1792	970	1640	884
	GC0E0	357-362-367	125	G	/NS - /PS	30	100	150	420	1617*	1472*	345	1790	970	1690	884
	GC0E0	360	125	G	/NS - /PS	37	100	150	420	1617*	1472*	300	1790	970	1690	903
	GC0E0	365-370	125	G	/NS - /PS	45	100	150	420	1617*	1472*	300	1790	970	1790	961

Fire-fighting units catalogue - Edition: September-2021

EUROFIRE WITH ELECTRIC PUMP 80-250
UNI EN 12845

PERFORMANCE RANGE

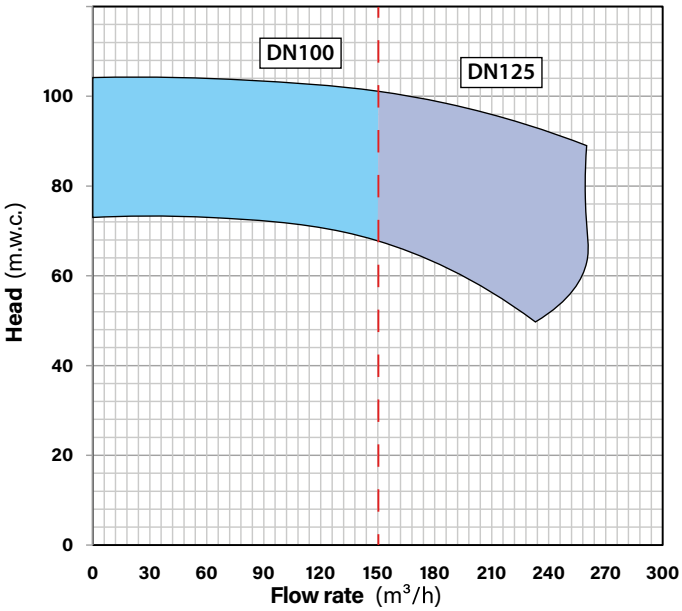

PRO ELECTRIC

GSM

CENTRIFUGAL PUMP

END SUCTION normalised single-impeller centrifuge with **BACK PULL OUT** horizontal shaft, with a spiral diffuser and separate support; axial intake and radial delivery UNI EN 12845 10.1

- Pump body and impeller: EN GJL 250 cast iron
- Shaft: AISI 431 Stainless Steel
- Mechanical seal: Ceramic-Graphite

MOTOR

Three-phase asynchronous closed externally self-ventilated with cage rotor Power calculated based on the power absorbed at the point of the characteristic curve which corresponds to a **NPSH of 16 m UNI EN 12845:2020 10.1**

HYDRAULIC PUMPS 80-250 EFFICIENCY

Diesel Version page 126

Pump Model	Pump ID	Motor		Pump Fittings			Flow Rate - m³/h											
		Electrical	Diesel	Intake	Delivery													
		kW	kW	Ø	Ø		0	50	80	100	120	140	160	180	200	220	240	260
80-250/2	371	45	47.7	100	80	H (mwc)	76.5	77	76	75	73	71	68	64	60			
80-250/3	376	55	47.7	100	80		80	80	79	78.5	77	75	72	68	64			
80-250/10	372	55	47.7	100	80		73	73	72.5	72	71	69	66.5	63	59			
80-250/4	373	55	66	100	80		85	85	84	83	82	80	77	74	70			
80-250/11	380	55	66	100	80		80	79.5	78	77.5	76	75	73	70	66	61	52.5	
80-250/5	385	75	66	100	80		81.5	82	82	81	80	79	77.5	76	74	71	67	63
80-250/6	384	75	66	100	80		96	96	96	95	94	92	90	87	84	80		
80-250/12	392	75	66	100	80		89	88.5	87	86.5	85.5	84.5	83	80	77	73	68	
80-250/7	386	75	108	100	80		89	89	89	88.5	88	87	85.5	84	82	79.5	76.5	73
80-250/8	394	75	108	100	80		102	102	101	100.5	100	98.5	96	94	91	87		
80-250/9	396	90	108	100	80		104	104	103	102.5	102	101.5	100	99	97	95	92	89

The values to the left of the reference refer to the maximum allowed delivery speed of 6 m/sec - The RED values entail speeds higher than 6 m/sec - The Values with GREY background indicate NPSH-R > 5m values.
For installations in HHS-HHP systems, contact our technical department. Nominal hydraulic characteristics of flow rate and head at the pump inlet, with performance tolerances according to UNI EN ISO 9906:2012 Grade 3B

EUROFIRE WITH ELECTRIC PUMP 80-250
UNI EN 12845

CENTRIFUGAL PUMP

COUPLING JOINT

Pump-motor connection via a spacer flexible coupling complete with accident prevention casing UNI EN 12845 10.1

KEY

NID	Nom. Intake Diameter
NDD	Nom. Delivery Diameter
NCD	Nom. Column Diameter
NS	Negative suction head set-up
PS	Positive suction head set-up
AD	Only found in the Negative suction head version **NS**

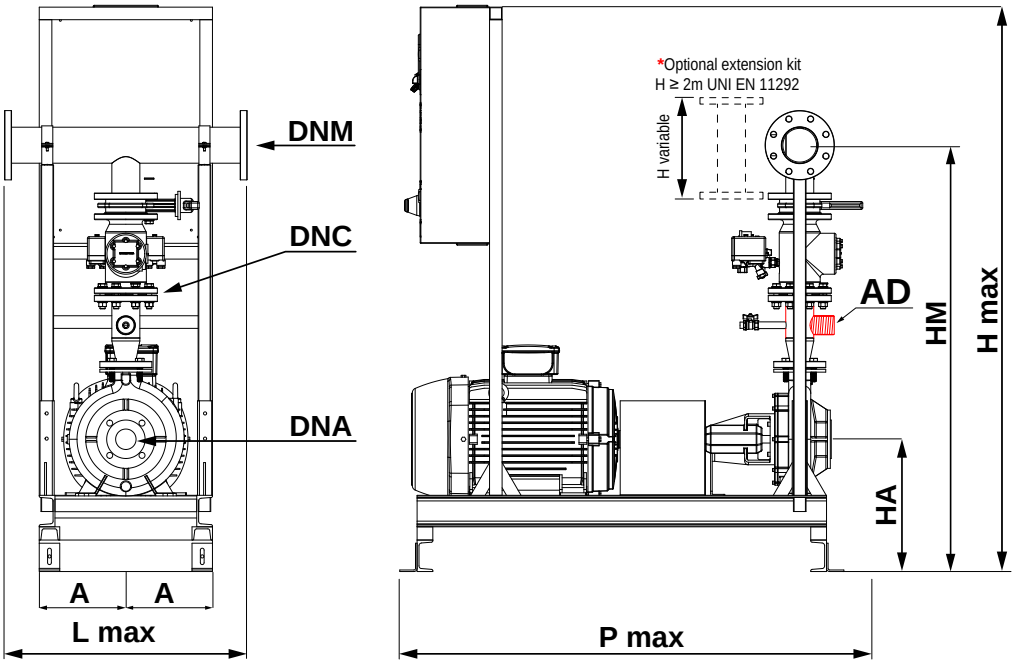

* H rise optional extension ≥ 2m

DIMENSIONS AND WEIGHTS OF EUROFIRE WITH ELECTRIC PUMPS 80-250

Jockey pumps on page 39

Q max	PRODUCT CODE 80-250					Power Pump	NID.	DNM	HA	HM		A	H max	L max	P max	Weight
										SP	ST					
m³/h	COMP..	ID Pump	DNC		HYDRAULIC CONFIG.	kW Electrical	Ø	Ø	mm	mm	mm	mm	mm	mm	mm	kg
≤ 150	GC0E0	371	100	E	/NS - /PS	45	100	125	420	1542*	1398*	340	1790	870	1790	753
	GC0E0	372-373-376-380	100	E	/NS - /PS	55	100	125	470	1592*	1448*	335	1790	870	1890	833
	GC0E0	384-385-386-392-394	100	E	/NS - /PS	75	100	125	470	1592*	1448*	345	1790	870	1720	986
	GC0E0	396	100	E	/NS - /PS	90	100	125	470	1677*	1533*	235	2000	870	2020	1016
> 150	GC0E0	371	125	F	/NS - /PS	45	100	150	420	1647*	1502*	340	1790	970	1790	973
	GC0E0	372-373-376-380	125	F	/NS - /PS	55	100	150	470	1697*	1552*	335	1790	970	1890	1053
	GC0E0	384-385-386-392-394	125	F	/NS - /PS	75	100	150	470	1697*	1552*	345	1790	970	1720	1206
	GC0E0	396	125	F	/NS - /PS	90	100	150	470	1782*	1637*	235	2000	970	2020	1236

Fire-fighting units catalogue - Edition: September-2021

EUROFIRE WITH ELECTRIC PUMP 80-315
UNI EN 12845

PERFORMANCE RANGE

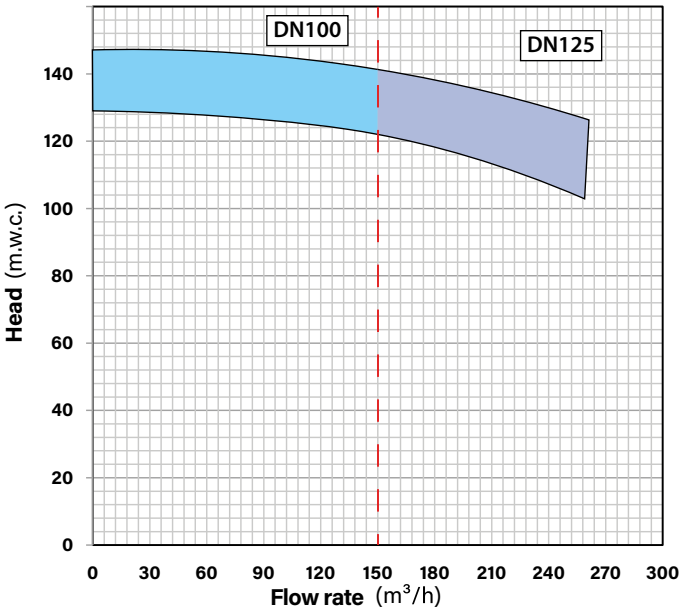

PRO ELECTRIC

GSM

CENTRIFUGAL PUMP

END SUCTION normalised single-impeller centrifuge with **BACK PULL OUT** horizontal shaft, with a spiral diffuser and separate support; axial intake and radial delivery UNI EN 12845 10.1

- Pump body and impeller: EN GJL 250 cast iron
- Shaft: AISI 431 Stainless Steel
- Mechanical seal: Ceramic-Graphite

MOTOR

Three-phase asynchronous closed externally self-ventilated with cage rotor Power calculated based on the power absorbed at the point of the characteristic curve which corresponds to a **NPSH of 16 m UNI EN 12845:2020 10.1**

HYDRAULIC PUMPS 80-315 EFFICIENCY

Diesel Version page 128

Pump Model	Pump ID	Motor		Pump Fittings			Flow Rate - m³/h											
		Electrical	Diesel	Intake	Delivery													
		kW	kW	Ø	Ø		0	50	80	100	120	140	160	180	200	220	240	260
80-315/3	403	110	108	100	80	H (mwc)	129	128	127	126	125	123	121	118	115	111	107	103
80-315/4	406	132	149	100	80		147	146.5	145.5	145	143.5	142	140	137.5	135	132	129.5	126

The values to the left of the reference refer to the maximum allowed delivery speed of 6 m/sec - The RED values entail speeds higher than 6 m/sec - The Values with GREY background indicate NPSH-R > 5m values.
For installations in HHS-HHP systems, contact our technical department. Nominal hydraulic characteristics of flow rate and head at the pump inlet, with performance tolerances according to UNI EN ISO 9906:2012 Grade 3B

EUROFIRE WITH ELECTRIC PUMP 80-315
UNI EN 12845

CENTRIFUGAL PUMP

COUPLING JOINT

Pump-motor connection via a spacer flexible coupling complete with accident prevention casing UNI EN 12845 10.1

KEY

NID	Nom. Intake Diameter
NDD	Nom. Delivery Diameter
NCD	Nom. Column Diameter
NS	Negative suction head set-up
PS	Positive suction head set-up
AD	Only found in the Negative suction head version **NS**

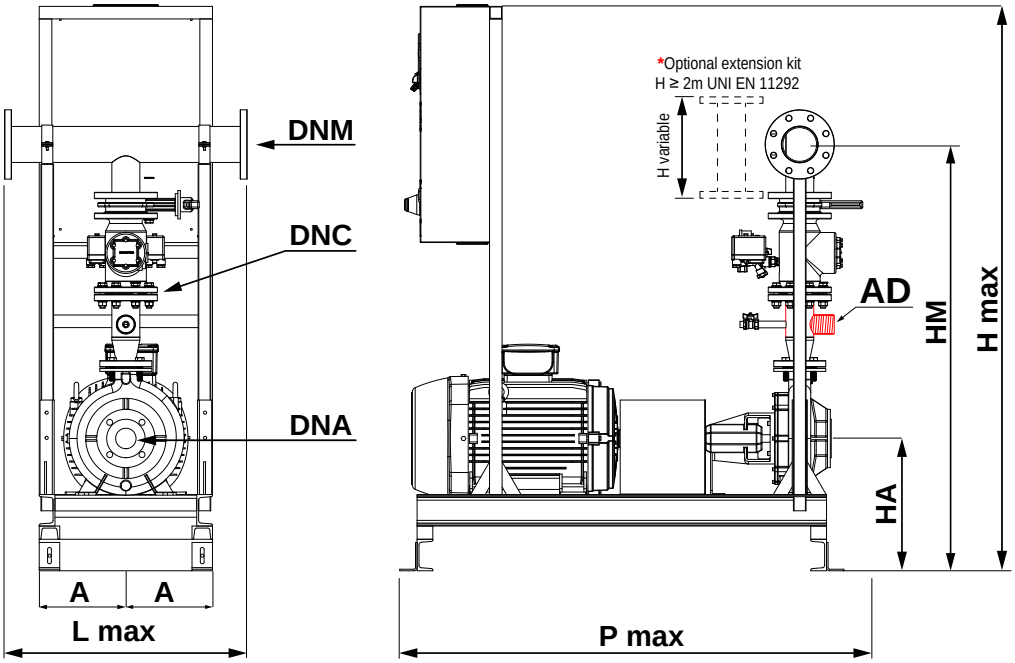

* H rise optional extension ≥ 2m

DIMENSIONS AND WEIGHTS OF EUROFIRE WITH ELECTRIC PUMPS 80-315

Jockey pumps on page 39

Q max	PRODUCT CODE 80-315					Power Pump	NID.	DNM	HA	HM		A	H max	L max	P max	Weight
										SP	ST					
m³/h	COMP..	ID Pump	DNC		HYDRAULIC CONFIG.	kW Electrical	Ø	Ø	mm	mm	mm	mm	mm	mm	mm	kg
≤ 150	GC0E0	403	100	E	/NS - /PS	110	100	125	500	1737*	1593*	445	1790	890	2730	1464
	GC0E0	406	100	E	/NS - /PS	132	100	125	580	1777*	1633*	455	1790	910	2730	1514
> 150	GC0E0	403	125	F	/NS - /PS	110	100	150	500	1842*	1697*	445	1790	970	2730	1684
	GC0E0	406	125	F	/NS - /PS	132	100	150	580	1882*	1737*	455	1790	970	2730	1734

Fire-fighting units catalogue - Edition: September-2021

EUROFIRE WITH ELECTRIC PUMP 100-200
UNI EN 12845

PERFORMANCE RANGE

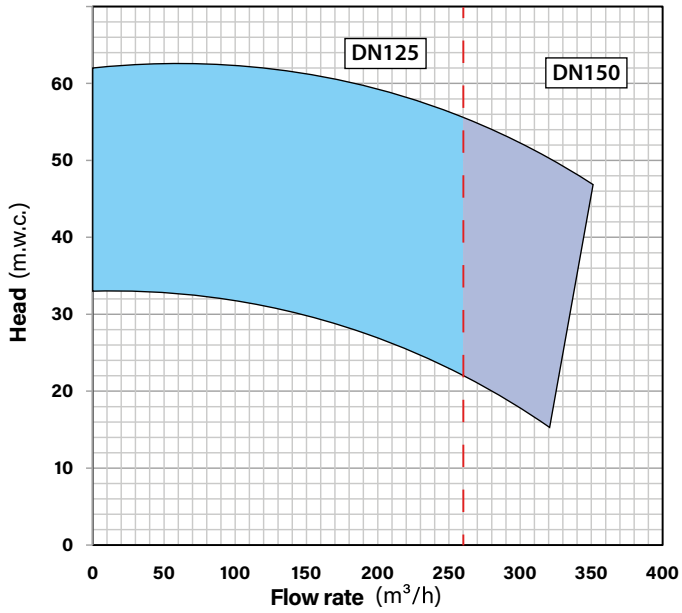

PRO ELECTRIC

GSM

CENTRIFUGAL PUMP

END SUCTION normalised single-impeller centrifuge with **BACK PULL OUT** horizontal shaft, with a spiral diffuser and separate support; axial intake and radial delivery UNI EN 12845 10.1

- Pump body and impeller: EN GJL 250 cast iron
- Shaft: AISI 431 Stainless Steel
- Mechanical seal: Ceramic-Graphite

MOTOR

Three-phase asynchronous closed externally self-ventilated with cage rotor Power calculated based on the power absorbed at the point of the characteristic curve which corresponds to a **NPSH of 16 m UNI EN 12845:2020 10.1**

HYDRAULIC PUMPS 100-200 EFFICIENCY

Diesel Version page 130

Pump Model	Pump ID	Motor		Pump Fittings			Flow Rate - m³/h											
		Electrical	Diesel	Intake	Delivery													
		kW	kW	Ø	Ø		0	50	100	150	200	220	240	260	280	320	350	380
100-200/1	410	22	25.2	125	100	H (mwc)	33	33	32.5	30.5	27	25.5	24	22	20	15.5		
100-200/3	420	30	36.5	125	100		41	41	40	38	34.5	33	31.5	30	28	23		
100-200/5	430	37	36.5	125	100		47	47	47	45	42.5	41	39.5	37.5	35	29.5		
100-200/6	435	45	47.7	125	100		53	53	52.5	51	49	48.5	47	45.5	44	39.5	33	
100-200/8	440	55	66	125	100		62	62	62	61	59	58	57	55.5	54	51	47	

The values to the left of the reference refer to the maximum allowed delivery speed of 6 m/sec - The RED values entail speeds higher than 6 m/sec - The Values with GREY background indicate NPSH-R > 5m values.
For installations in HHS-HHP systems, contact our technical department. Nominal hydraulic characteristics of flow rate and head at the pump inlet, with performance tolerances according to UNI EN ISO 9906:2012 Grade 3B

EUROFIRE WITH ELECTRIC PUMP 100-200
UNI EN 12845

CENTRIFUGAL PUMP

COUPLING JOINT

Pump-motor connection via a spacer flexible coupling complete with accident prevention casing UNI EN 12845 10.1

KEY

NID	Nom. Intake Diameter
NDD	Nom. Delivery Diameter
NCD	Nom. Column Diameter
NS	Negative suction head set-up
PS	Positive suction head set-up
AD	Only found in the Negative suction head version **NS**

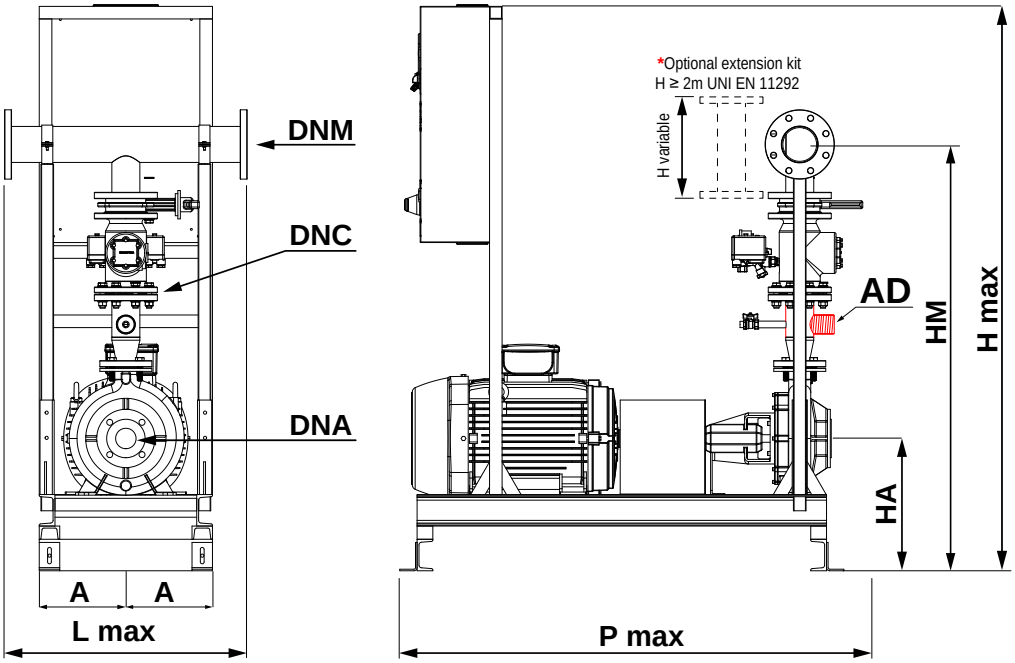

* H rise optional extension ≥ 2m

DIMENSIONS AND WEIGHTS OF EUROFIRE WITH ELECTRIC PUMPS 100-200

Jockey pumps on page 39

Q max	PRODUCT CODE 100-200					Power Pump	NID.	DNM	HA	HM		A	H max	L max	P max	Weight
										SP	ST					
m³/h	COMP..	ID Pump	DNC		HYDRAULIC CONFIG.	kW Electrical	Ø	Ø	mm	mm	mm	mm	mm	mm	mm	kg
≤ 260	GC0E0	410	125	F	/NS - /PS	22	125	150	420	1663*	1501*	295	2000	970	1640	833
	GC0E0	420	125	F	/NS - /PS	30	125	150	420	1663*	1501*	300	2000	970	1590	894
	GC0E0	430	125	F	/NS - /PS	37	125	150	420	1663*	1501*	300	2000	970	1690	913
	GC0E0	435	125	F	/NS - /PS	45	125	150	420	1663*	1501*	340	2000	970	1690	971
	GC0E0	440	125	F	/NS - /PS	55	125	150	420	1663*	1501*	325	2000	970	1710	1051
> 260	GC0E0	410	150	G	/NS - /PS	22	125	150	420	1786*	1634*	295	2000	970	1640	833
	GC0E0	420	150	G	/NS - /PS	30	125	150	420	1786*	1634*	300	2000	970	1590	894
	GC0E0	430	150	G	/NS - /PS	37	125	150	420	1786*	1634*	300	2000	970	1690	913
	GC0E0	435	150	G	/NS - /PS	45	125	150	420	1786*	1634*	340	2000	970	1690	971
	GC0E0	440	150	G	/NS - /PS	55	125	150	420	1786*	1634*	325	2000	970	1710	1051

The technical data are not binding and can be modified without prior notice | The images are indicative and not binding

EUROFIRE WITH ELECTRIC PUMP 100-250
UNI EN 12845

PERFORMANCE RANGE

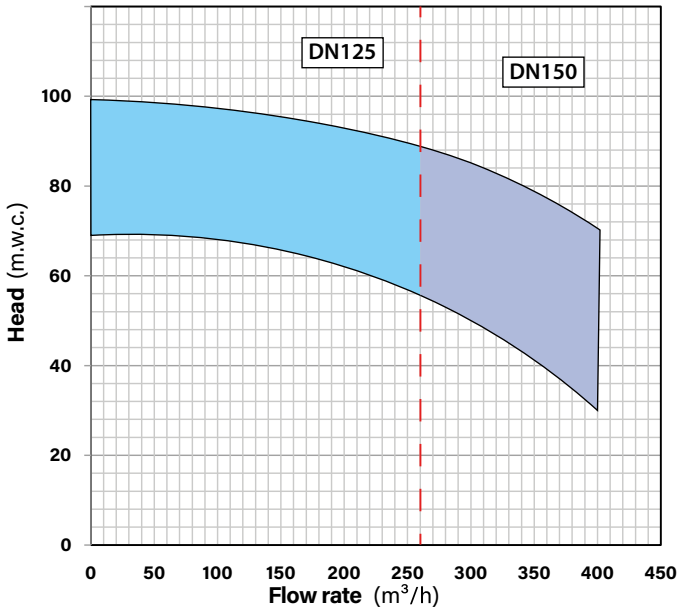

PRO ELECTRIC

GSM

CENTRIFUGAL PUMP

END SUCTION normalised single-impeller centrifuge with **BACK PULL OUT** horizontal shaft, with a spiral diffuser and separate support; axial intake and radial delivery UNI EN 12845 10.1

- Pump body and impeller: EN GJL 250 cast iron
- Shaft: AISI 431 Stainless Steel
- Mechanical seal: Ceramic-Graphite

MOTOR

Three-phase asynchronous closed externally self-ventilated with cage rotor Power calculated based on the power absorbed at the point of the characteristic curve which corresponds to a **NPSH of 16 m UNI EN 12845:2020 10.1**

HYDRAULIC PUMPS 100-250 EFFICIENCY

Diesel Version page 132

Pump Model	Pump ID	Motor		Pump Fittings			Flow Rate - m³/h											
		Electrical	Diesel	Intake	Delivery													
		kW	kW	Ø	Ø		0	50	100	150	200	220	240	260	280	320	360	400
100-250/3	450	55	66	125	100	H (mwc)	69	69	67.5	65.5	62.5	61	59	56	53	47	40	30
100-250/5	460	75	66	125	100		75	75	74	72.5	69.5	67.5	65	62.5	60	54	47	39
100-250/7	471	75	108	125	100		80	80	79	77	74.5	73	70.5	68.5	66	60.5	53	46
100-250/9	476	90	108	125	100		89.5	89	87	85	82.5	81	79.5	77.5	75	69.5	63.5	56
100-250/11	481	110	108	125	100		95	94.5	93	90.5	88	86.5	85	83.5	81.5	77.5	72	63
100-250/14	479	110	108	125	100		99	98.5	97	95.5	93	92	90.5	89	87	83	77.5	70

The values to the left of the reference refer to the maximum allowed delivery speed of 6 m/sec - The RED values entail speeds higher than 6 m/sec - The Values with GREY background indicate NPSH-R > 5m values.
For installations in HHS-HHP systems, contact our technical department. Nominal hydraulic characteristics of flow rate and head at the pump inlet, with performance tolerances according to UNI EN ISO 9906:2012 Grade 3B

EUROFIRE WITH ELECTRIC PUMP 100-250
UNI EN 12845

CENTRIFUGAL PUMP

COUPLING JOINT

Pump-motor connection via a spacer flexible coupling complete with accident prevention casing UNI EN 12845 10.1

KEY

NID	Nom. Intake Diameter
NDD	Nom. Delivery Diameter
NCD	Nom. Column Diameter
NS	Negative suction head set-up
PS	Positive suction head set-up
AD	Only found in the Negative suction head version **NS**

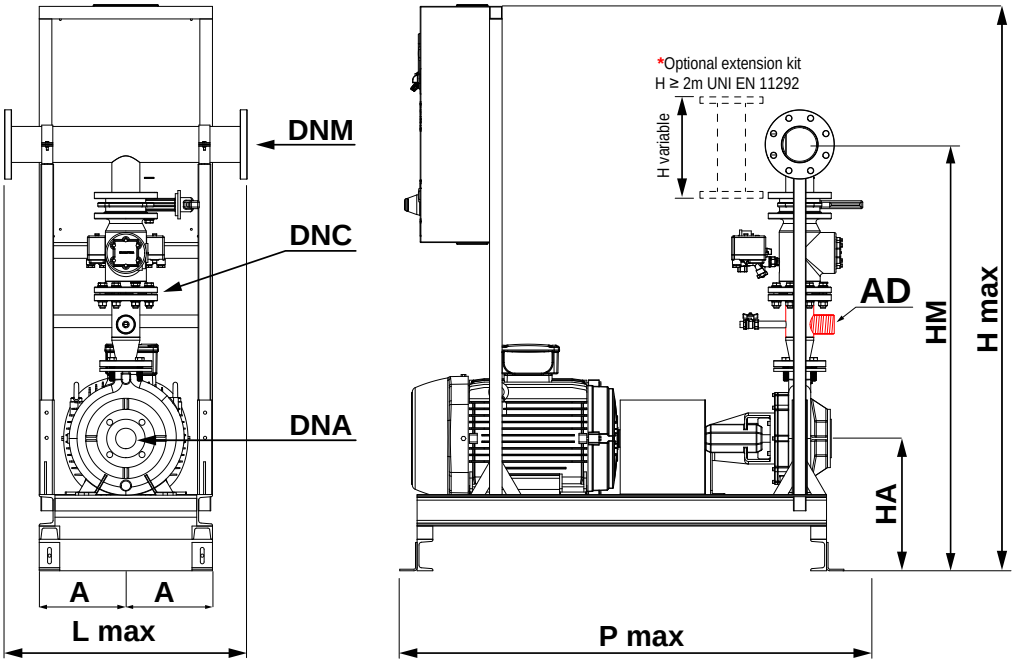

* H rise optional extension ≥ 2m

DIMENSIONS AND WEIGHTS OF EUROFIRE WITH ELECTRIC PUMPS 100-250

Jockey pumps on page 39

Q max	PRODUCT CODE 100-250					Power Pump	NID.	DNM	HA	HM SP	HM ST	A	H max	L max	P max	Weight
m³/h	COMP..	ID Pump	DNC		HYDRAULIC CONFIG.	kW Electrical	Ø	Ø	mm	mm	mm	mm	mm	mm	mm	kg
≤ 260	GC0E0	450	125	F	/NS - /PS	55	125	150	420	1713*	1551*	370	2190	970	1890	1065
	GC0E0	460-471	125	F	/NS - /PS	75	125	150	470	1798*	1636*	355	2190	970	1990	1218
	GC0E0	476	125	F	/NS - /PS	90	125	150	470	1798*	1636*	395	2190	970	1830	1248
	GC0E0	479-481	125	F	/NS - /PS	110	125	150	470	1798*	1636*	450	2190	970	2730	1692
> 260	GC0E0	450	150	G	/NS - /PS	55	125	200	420	1736*	1584*	370	2190	1070	1890	1165
	GC0E0	460-471	150	G	/NS - /PS	75	125	200	470	1871*	1719*	355	2190	1070	1990	1278
	GC0E0	476	150	G	/NS - /PS	90	125	200	470	1871*	1719*	395	2190	1070	1830	1308
	GC0E0	479-481	150	G	/NS - /PS	110	125	200	470	1871*	1719*	450	2190	1070	2730	1752

Fire-fighting units catalogue - Edition: September-2021

EUROFIRE WITH ELECTRIC PUMP 100-315
UNI EN 12845

PERFORMANCE RANGE

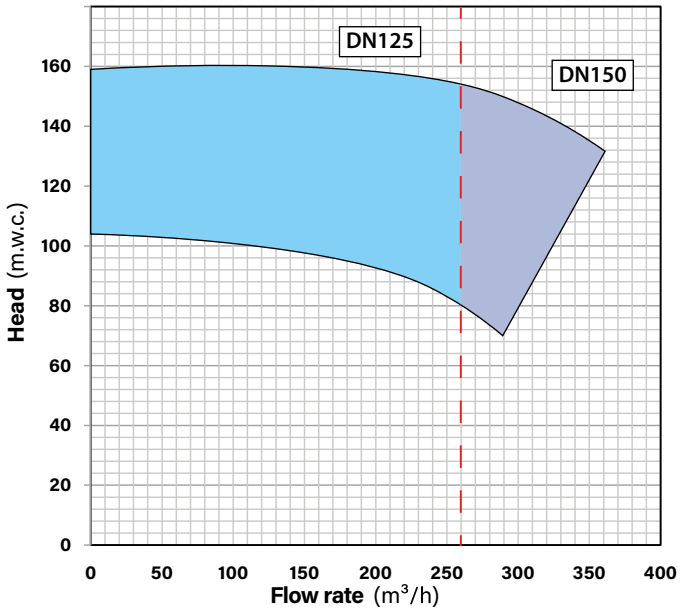

PRO ELECTRIC

GSM

CENTRIFUGAL PUMP

END SUCTION normalised single-impeller centrifuge with **BACK PULL OUT** horizontal shaft, with a spiral diffuser and separate support; axial intake and radial delivery UNI EN 12845 10.1

- Pump body and impeller: EN GJL 250 cast iron
- Shaft: AISI 431 Stainless Steel
- Mechanical seal: Ceramic-Graphite

MOTOR

Three-phase asynchronous closed externally self-ventilated with cage rotor Power calculated based on the power absorbed at the point of the characteristic curve which corresponds to a **NPSH of 16 m UNI EN 12845:2020 10.1**

HYDRAULIC PUMPS 100-315 EFFICIENCY

Diesel Version page 134

Pump Model	Pump ID	Motor		Pump Fittings			Flow Rate - m³/h											
		Electrical	Diesel	Intake	Delivery													
		kW	kW	Ø	Ø		0	50	100	150	200	220	240	260	280	320	340	360
100-315/1	513	90	108	125	100	H (mwc)	104	103	101	99	94	90	86	81	74			
100-315/11	491	110	108	125	100		114	114	113.5	111	105.5	102	97	91	82.5			
100-315/2	492	110	108	125	100		116	115.5	114.5	112.5	108.5	106	103	99	94	79		
100-315/4	482	132	149	125	100		131	130.5	130	128.5	125.5	123.5	121	118	112.5	100	93	
100-315/6	486	160	149	125	100		138.5	138	137	136	134	132.5	130.5	128	124.5	113	105	
100-315/8	483	160	177	125	100		146	145.5	145	144	142.5	141.5	140	137	133	122	115	
100-315/9	488	200	202	125	100		152	152	150	148	145	143	141	139	137	132	129	
100-315/10	484	200	202	125	100		159	159	159	159	158.5	157	156	154	151	144	138	132

The values to the left of the reference refer to the maximum allowed delivery speed of 6 m/sec - The RED values entail speeds higher than 6 m/sec - The Values with GREY background indicate NPSH-R > 5m values.
For installations in HHS-HHP systems, contact our technical department. Nominal hydraulic characteristics of flow rate and head at the pump inlet, with performance tolerances according to UNI EN ISO 9906:2012 Grade 3B

EUROFIRE WITH ELECTRIC PUMP 100-315
UNI EN 12845

CENTRIFUGAL PUMP

COUPLING JOINT

Pump-motor connection via a spacer flexible coupling complete with accident prevention casing UNI EN 12845 10.1

KEY

NID	Nom. Intake Diameter
NDD	Nom. Delivery Diameter
NCD	Nom. Column Diameter
NS	Negative suction head set-up
PS	Positive suction head set-up
AD	Only found in the Negative suction head version **NS**

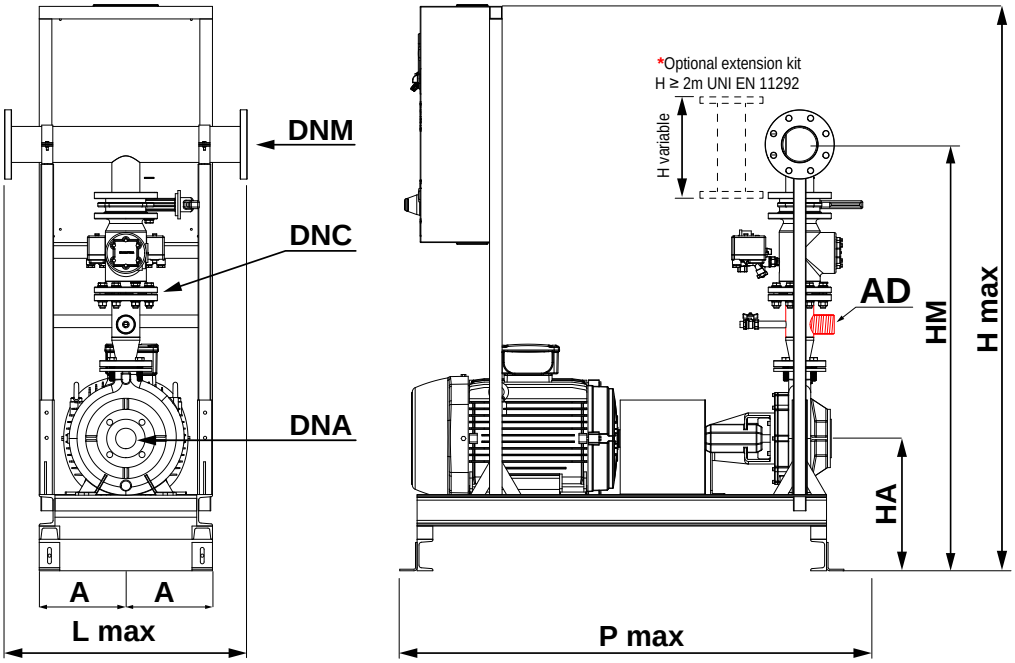

* H rise optional extension ≥ 2m

DIMENSIONS AND WEIGHTS OF EUROFIRE WITH ELECTRIC PUMPS 100-315

Jockey pumps on page 39

Q max	PRODUCT CODE 100-315					Power Pump	NID.	DNM	HA	HM		A	H max	L max	P max	Weight
										SP	ST					
m³/h	COMP..	ID Pump	DNC		HYDRAULIC CONFIG.	kW Electrical	Ø	Ø	mm	mm	mm	mm	mm	mm	mm	kg
≤ 260	GC0E0	513	125	F	/NS - /PS	90	125	150	470	1858*	1696*	355	2190	970	1990	1262
	GC0E0	491-492	125	F	/NS - /PS	110	125	150	580	1858*	1696*	410	2190	970	2740	1642
	GC0E0	482	125	F	/NS - /PS	132	125	150	580	1898*	1736*	455	2090	970	2730	1742
	GC0E0	483-486	125	F	/NS - /PS	160	125	150	620	1898*	1736*	395	2090	970	2290	1872
	GC0E0	484-488	125	F	/NS - /PS	200	125	150	620	1898*	1736*	395	2090	970	2721	1972
> 260	GC0E0	513	150	G	/NS - /PS	90	125	200	470	1931*	1779*	355	2190	1070	1990	1322
	GC0E0	491-492	150	G	/NS - /PS	110	125	200	580	1931*	1779*	410	2190	1070	2740	1702
	GC0E0	482	150	G	/NS - /PS	132	125	200	580	1971*	1819*	455	2190	1070	2730	1802
	GC0E0	483-486	150	G	/NS - /PS	160	125	200	620	1971*	1819*	395	2190	1070	2290	1932
	GC0E0	484-488	150	G	/NS - /PS	200	125	200	620	1971*	1819*	395	2190	1070	2721	2032

Fire-fighting units catalogue - Edition: September-2021

EUROFIRE WITH ELECTRIC PUMP 125-250
UNI EN 12845

PERFORMANCE RANGE

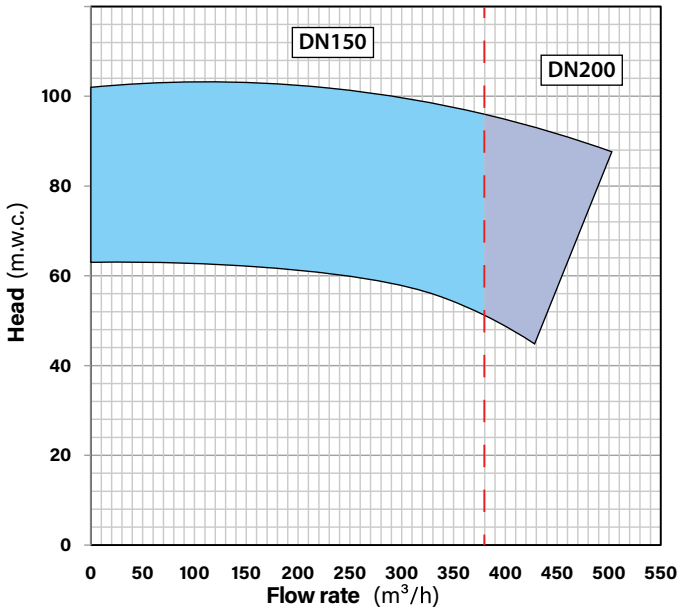

PRO ELECTRIC

GSM

CENTRIFUGAL PUMP

END SUCTION normalised single-impeller centrifuge with **BACK PULL OUT** horizontal shaft, with a spiral diffuser and separate support; axial intake and radial delivery UNI EN 12845 10.1

- Pump body and impeller: EN GJL 250 cast iron
- Shaft: AISI 431 Stainless Steel
- Mechanical seal: Ceramic-Graphite

MOTOR

Three-phase asynchronous closed externally self-ventilated with cage rotor Power calculated based on the power absorbed at the point of the characteristic curve which corresponds to a **NPSH of 16 m UNI EN 12845:2020 10.1**

HYDRAULIC PUMPS 125-250 EFFICIENCY

Diesel Version page 136

Pump Model	Pump ID	Motor		Pump Fittings			Flow Rate - m³/h											
		Electrical	Diesel	Intake	Delivery													
		kW	kW	Ø	Ø		0	100	200	240	280	320	340	360	380	400	440	480
125-250/1	485	75	108	150	125	H (mwc)	63	63	62.5	61.5	60	57.5	55.5	53.5	51	48.5		
125-250/2	502	90	108	150	125		74	74	74	73.5	71	68	66.5	65	63	61	57	
125-250/12	501	90	108	150	125		71.5	71	69	68.5	67	65	64	63	62	60	57	55
125-250/3	503	110	108	150	125		80	80	79.5	78.5	77	74.5	73	72	70	68	64	
125-250/5	515	132	149	150	125		91	91	90.5	89.5	88	86.5	85	84	82.5	81	77	72.5
125-250/7	510	132	149	150	125		84	84	83	82	81	80	79	78.5	77.5	76.5		
125-250/13	516	160	149	150	125		88	90	92	92	91.5	91	90.5	90	89	88	86	85
125-250/8	520	160	149	150	125		98	98	98	97.8	97.5	97	96.5	96	95.5	95	88	87
125-250/6	525	160	149	150	125		102	102	102	101.5	100	98.5	98	97	96	95	92	

The values to the left of the reference refer to the maximum allowed delivery speed of 6 m/sec - The RED values entail speeds higher than 6 m/sec - The Values with GREY background indicate NPSH-R > 5m values.
For installations in HHS-HHP systems, contact our technical department. Nominal hydraulic characteristics of flow rate and head at the pump inlet, with performance tolerances according to UNI EN ISO 9906:2012 Grade 3B

EUROFIRE WITH ELECTRIC PUMP 125-250
UNI EN 12845

CENTRIFUGAL PUMP

COUPLING JOINT

Pump-motor connection via a spacer flexible coupling complete with accident prevention casing UNI EN 12845 10.1

KEY

NID	Nom. Intake Diameter
NDD	Nom. Delivery Diameter
NCD	Nom. Column Diameter
NS	Negative suction head set-up
PS	Positive suction head set-up
AD	Only found in the Negative suction head version **NS**

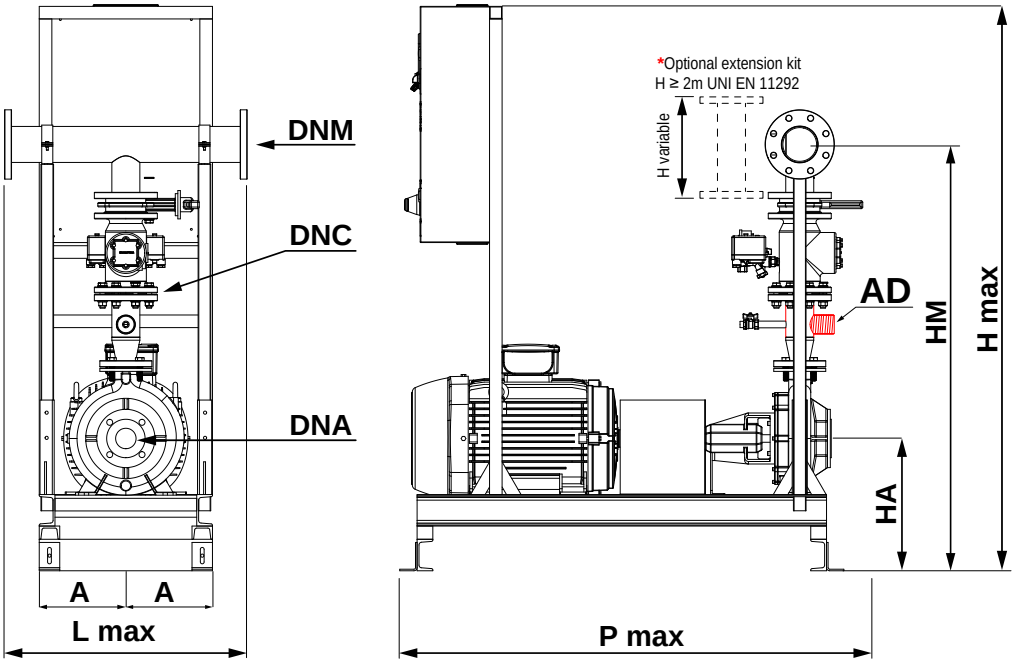

* H rise optional extension ≥ 2m

DIMENSIONS AND WEIGHTS OF EUROFIRE WITH ELECTRIC PUMPS 125-250

Jockey pumps on page 39

Q max	PRODUCT CODE 125-250					Power Pump	NID.	DNM	HA	HM SP	HM ST	A	H max	L max	P max	Weight
m³/h	COMP..	ID Pump	DNC		HYDRAULIC CONFIG.	kW Electrical	Ø	Ø	mm	mm	mm	mm	mm	mm	mm	kg
≤ 380	GC0E0	485	150	G	/NS - /PS	75	150	200	470	1971*	1822*	395	2190	1070	1990	1241
	GC0E0	501-502	150	G	/NS - /PS	90	150	200	470	1971*	1822*	355	2190	1070	1990	1271
	GC0E0	503-505	150	G	/NS - /PS	110	150	200	580	1971*	1822*	410	2190	1070	2740	1751
	GC0E0	510-515	150	G	/NS - /PS	132	150	200	580	2011	1862*	455	2190	1070	2730	1801
	GC0E0	516-520-525	150	G	/NS - /PS	160	150	200	620	2011	1862*	395	2190	1070	2290	1931
> 380	GC0E0	485	200	H	/NS - /PS	75	150	250	470	2175	2025	395	2250	1120	1990	1291
	GC0E0	501-502	200	H	/NS - /PS	90	150	250	470	2175	2025	355	2250	1120	1990	1321
	GC0E0	503-505	200	H	/NS - /PS	110	150	250	580	2175	2025	410	2250	1120	2740	1831
	GC0E0	510-515	200	H	/NS - /PS	132	150	250	580	2215	2065	455	2250	1120	2730	1931
	GC0E0	516-520-525	200	H	/NS - /PS	160	150	250	620	2215	2065	395	2250	1120	2290	2061

Fire-fighting units catalogue - Edition: September-2021

EUROFIRE WITH ELECTRIC PUMP 125-315
UNI EN 12845

PERFORMANCE RANGE

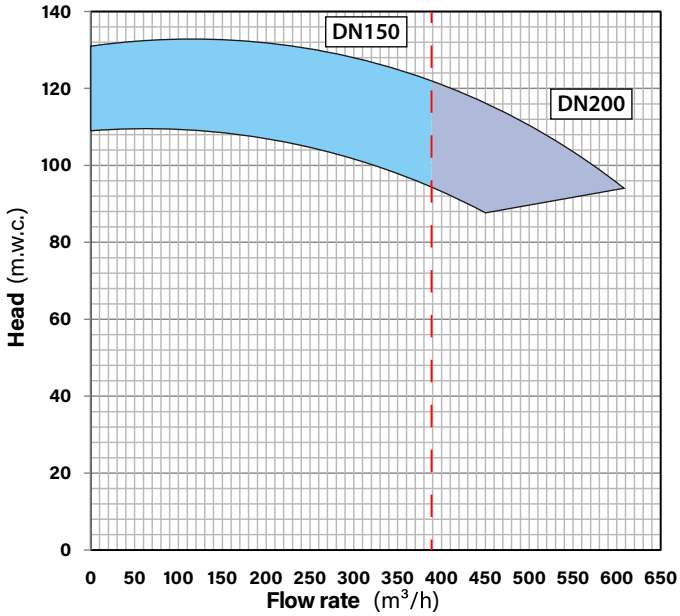

PRO ELECTRIC

GSM

CENTRIFUGAL PUMP

END SUCTION normalised single-impeller centrifuge with **BACK PULL OUT** horizontal shaft, with a spiral diffuser and separate support; axial intake and radial delivery UNI EN 12845 10.1

- Pump body and impeller: EN GJL 250 cast iron
- Shaft: AISI 431 Stainless Steel
- Mechanical seal: Ceramic-Graphite

MOTOR

Three-phase asynchronous closed externally self-ventilated with cage rotor Power calculated based on the power absorbed at the point of the characteristic curve which corresponds to a **NPSH of 16 m UNI EN 12845:2020 10.1**

HYDRAULIC PUMPS 125-315 EFFICIENCY

Diesel Version page 138

Pump Model	Pump ID	Motor		Pump Fittings			Flow Rate - m³/h											
		Electrical	Diesel	Intake	Delivery													
		kW	kW	Ø	Ø		0	100	150	200	250	300	350	400	450	500	550	600
125-315/1	530	160	177	150	125	H (mwc)	109	109	109	108	105.5	102	98	94	88			
125-315/3	489	200	202	150	125		121	120	119	118	116	113	110	105	100			
125-315/5	491	200	202	150	125		123	123	122.5	122	121	119	116	113	108	103	97	92
125-315/4	537	250	222	150	125		131	131	130	129	128	126	124	121	116	112		

The values to the left of the reference refer to the maximum allowed delivery speed of 6 m/sec - The RED values entail speeds higher than 6 m/sec - The Values with GREY background indicate NPSH-R > 5m values.
For installations in HHS-HHP systems, contact our technical department. Nominal hydraulic characteristics of flow rate and head at the pump inlet, with performance tolerances according to UNI EN ISO 9906:2012 Grade 3B

EUROFIRE WITH ELECTRIC PUMP 125-315
UNI EN 12845

CENTRIFUGAL PUMP

COUPLING JOINT

Pump-motor connection via a spacer flexible coupling complete with accident prevention casing UNI EN 12845 10.1

KEY

NID	Nom. Intake Diameter
NDD	Nom. Delivery Diameter
NCD	Nom. Column Diameter
NS	Negative suction head set-up
PS	Positive suction head set-up
AD	Only found in the Negative suction head version **NS**

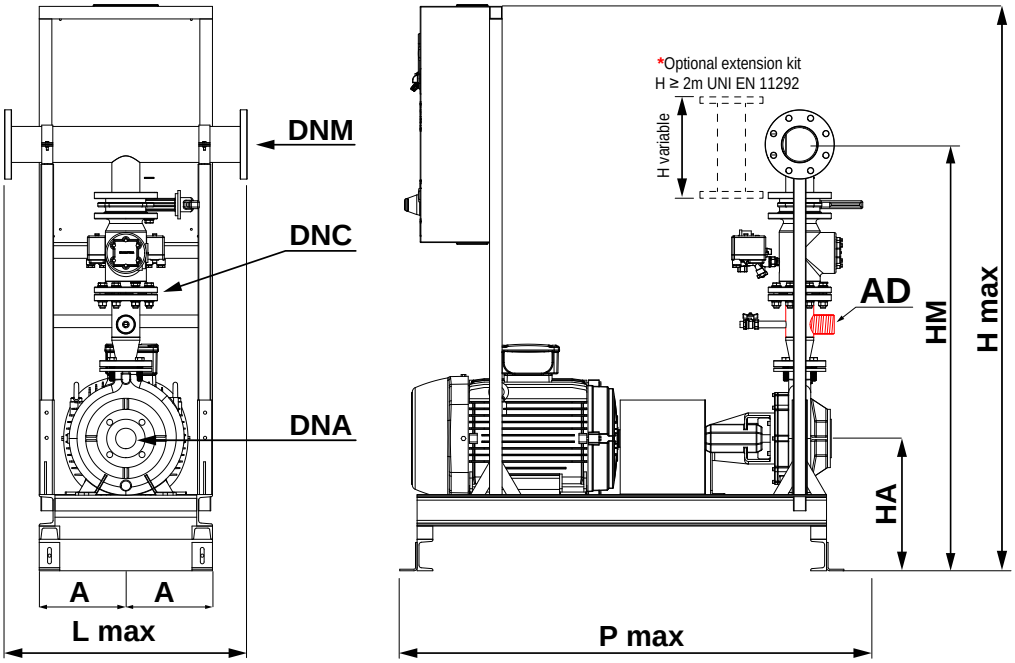

* H rise optional extension ≥ 2m

DIMENSIONS AND WEIGHTS OF EUROFIRE WITH ELECTRIC PUMPS 125-315

Jockey pumps on page 39

Q max	PRODUCT CODE 125-315					Power Pump	NID.	DNM	HA	HM SP	HM ST	A	H max	L max	P max	Weight
m³/h	COMP..	ID Pump	DNC		HYDRAULIC CONFIG.	kW Electrical	Ø	Ø	mm	mm	mm	mm	mm	mm	mm	kg
≤ 380	GC0E0	530	150	G	/NS - /PS	160	150	200	600	1991	1842*	465	2190	1070	2429	1931
	GC0E0	489-491	150	G	/NS - /PS	200	150	200	580	2011	1862*	465	2190	1070	3000	2028
	GC0E0	537	150	G	/NS - /PS	250	150	200	600	2011	1862*	485	2190	1070	3180	2130
> 380	GC0E0	530	200	H	/NS - /PS	160	150	250	600	2195	2045	465	2250	1120	2429	2058
	GC0E0	489-491	200	H	/NS - /PS	200	150	250	580	2215	2065	465	2250	1120	3000	2158
	GC0E0	537	200	H	/NS - /PS	250	150	250	600	2215	2065	485	2250	1120	3180	2230

Fire-fighting units catalogue - Edition: September-2021

EUROFIRE WITH ELECTRIC PUMP 150-315
UNI EN 12845

EPRO ELECTRIC

GSM

PERFORMANCE RANGE

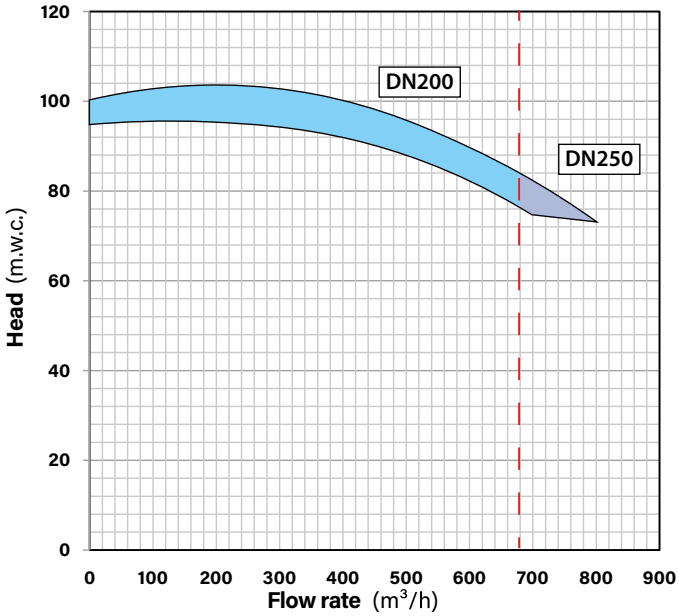

CENTRIFUGAL PUMP

END SUCTION normalised single-impeller centrifuge with **BACK PULL OUT** horizontal shaft, with a spiral diffuser and separate support; axial intake and radial delivery UNI EN 12845 10.1

- Pump body and impeller: EN GJL 250 cast iron
- Shaft: AISI 431 Stainless Steel
- Mechanical seal: Ceramic-Graphite

MOTOR

Three-phase asynchronous closed externally self-ventilated with cage rotor Power calculated based on the power absorbed at the point of the characteristic curve which corresponds to a **NPSH of 16 m UNI EN 12845:2020 10.1**

HYDRAULIC PUMPS 150-315 EFFICIENCY

Diesel Version page 140

Pump Model	Pump ID	Motor		Pump Fittings			Flow Rate - m³/h											
		Electrical	Diesel	Intake	Delivery													
		kW	kW	Ø	Ø		0	200	250	300	350	400	450	500	550	600	700	800
150-315/1	540	200	202	200	150	H	95	95	95	94.5	94	92.5	90.5	88	85	82	75	
150-315/6	545	250	222	200	150	H	100	103	103	103	102	100	97.5	95	92.5	90	82	73

The values to the left of the reference refer to the maximum allowed delivery speed of 6 m/sec - The RED values entail speeds higher than 6 m/sec - The Values with GREY background indicate NPSH-R > 5m values.
For installations in HHS-HHP systems, contact our technical department. Nominal hydraulic characteristics of flow rate and head at the pump inlet, with performance tolerances according to UNI EN ISO 9906:2012 Grade 3B

EUROFIRE WITH ELECTRIC PUMP 150-315
UNI EN 12845

CENTRIFUGAL PUMP

COUPLING JOINT

Pump-motor connection via a spacer flexible coupling complete with accident prevention casing UNI EN 12845 10.1

KEY

NID	Nom. Intake Diameter
NDD	Nom. Delivery Diameter
NCD	Nom. Column Diameter
NS	Negative suction head set-up
PS	Positive suction head set-up
AD	Only found in the Negative suction head version **NS**

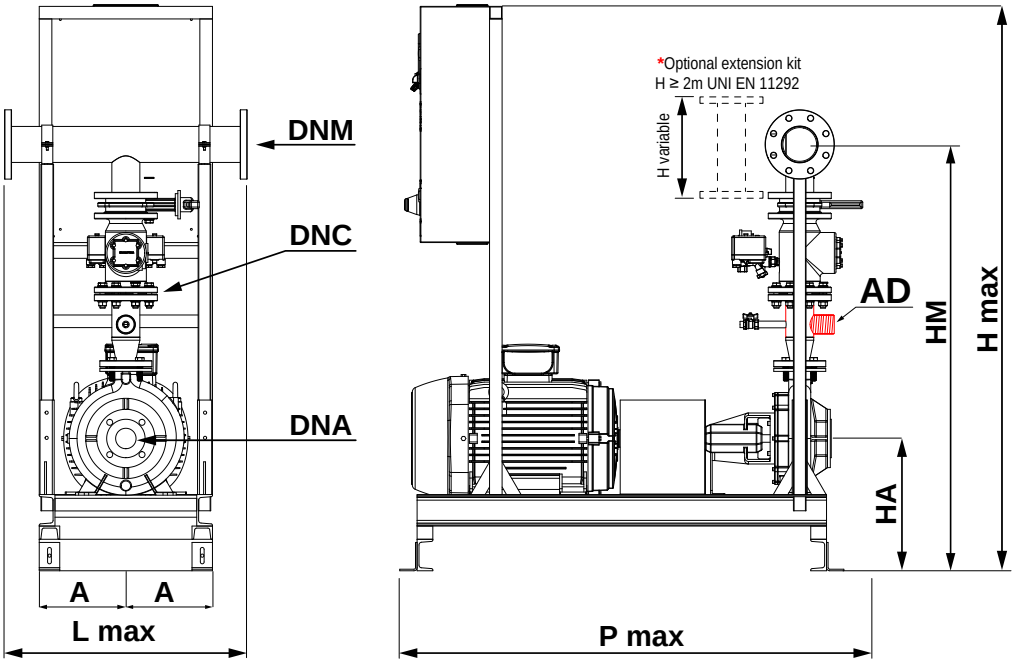

* H rise optional extension ≥ 2m

DIMENSIONS AND WEIGHTS OF EUROFIRE WITH ELECTRIC PUMPS 150-315

Jockey pumps on page 39

Q max	PRODUCT CODE 150-315					Power Pump	NID.	DNM	HA	HM		A	H max	L max	P max	Weight
										SP	ST					
m³/h	COMP..	ID Pump	DNC		HYDRAULIC CONFIG.	kW Electrical	Ø	Ø	mm	mm	mm	mm	mm	mm	mm	kg
≤ 680	GC0E0	540	200	H	/NS - /PS	200	200	200	580	2170	1990	465	2285	1070	3000	2045
	GC0E0	545	200	H	/NS - /PS	250	200	200	600	2190	1888*	485	2305	1070	2980	2130
> 680	GC0E0	540	250	I	/NS - /PS	200	300	250	580	2250	2090	465	2365	1150	3000	2225
	GC0E0	545	250	I	/NS - /PS	250	300	250	600	2270	2988	485	2385	1150	2980	2230

Fire-fighting units catalogue - Edition: September-2021

FAQ

NPSH INTAKE CAPACITY WHAT DOES IT MEAN ?

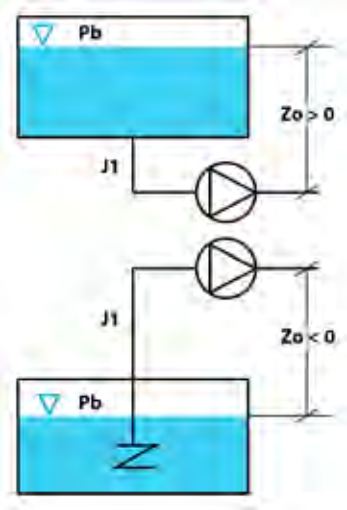

NPSH (Net Positive Suction Head) can be defined as the "absolute net load height" and represents the total load height at the pump inlet, measured with respect to the reference plane, increased by the height that corresponds to the atmospheric pressure and decreased by the height that corresponds to the vapour pressure.
In the case of a horizontal pump, the reference plane passes through the rotation shaft of the pump. The NPSH value is expressed in metres. NPSH-R (required) is that indicated by the manufacturer for the pump to function properly. NPSH-A (available) is calculated based on the system characteristics: pressure drops in the duct, vapour pressure of the liquid, barometric pressure, altitude above sea level and liquid head that can be above or below the pump shaft.

$$NPSH\text{-}A = Zo + (Po+Pb-Pv) / (p*g)-J1$$

FIRE FIGHTING UNIT WHAT ARE THE CONDITIONS REQUIRED IN INTAKE ?

In point 10.6, UNI EN 12845 indicates that the intake at the maximum design flow rate must be NPSH-A > NPSH-R + 1m.

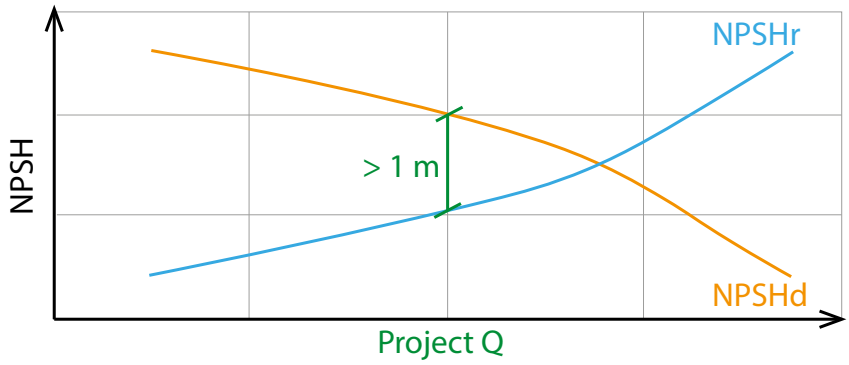

MORE INFORMATION
WWW.IDRO-ELETTRICA.IT

EUROFIRE DIESEL

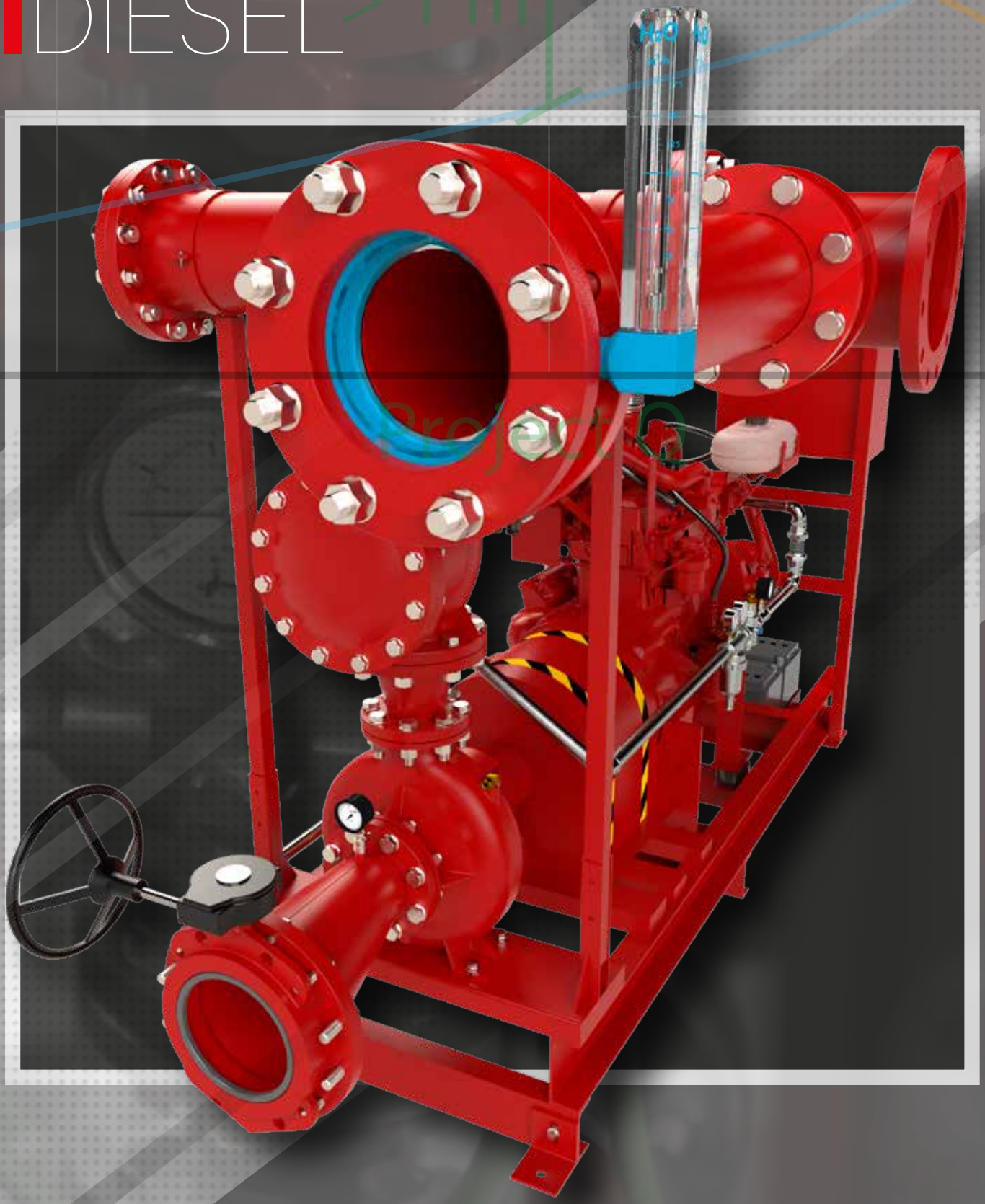

UNI EN 12845 - UNI EN 10779

EUROFIRE DIESEL

Fire-fighting pressurisation units according to UNI EN 12845
With Horizontal Centrifugal Motor Pumps

MAIN FEATURES The EUROFIRE series in MODULAR version includes units with:

Flow rate Q	up to	800	m^3/h
Head H	up to	159	mwc
Electric pump	up to	250	kW
Diesel pump	up to	255	kW in NA curve

Every module is autonomous and reflects the definition of a pumping unit (PUMP-SET) as described in **UNI 11292:2019 3.15.**

Every pumping unit includes:

- End suction, back pull out single-impeller centrifugal pump **UNI EN 12845 10.1**
- Diesel engine with power expressed in NA curve (continuous overloadable power 10% DIN 6271 - ISO 3046-1) as required by **UNI EN 12845 10.9.1** and which exceeds that required by the pump at **NPSH16 UNI EN 12845 10.1-10.9.1-10.9.3**
- Cardan flexible coupling **UNI EN 12845 10.1**
- Base in metal profiles
- Electrical panel with Epro intelligent control unit
- Hydraulic accessories external to the pump-set with diameters sized according to **UNI EN 12845 13.2.3**
- Electric accessories external to the pump-set

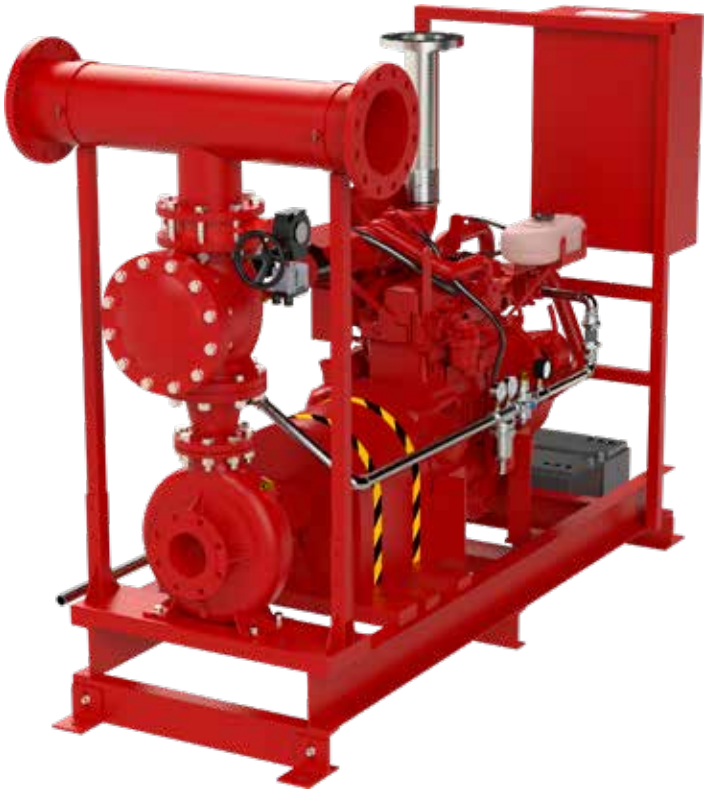

Every pumping unit is designed to be independently secured to the foundation/base floor **UNI 11292:2019 6.6**
The units are available in the **POSITIVE** and **NEGATIVE SUCTION HEAD** versions

Hydraulic diagram page 95
List of components page 283
Completion accessories page 215

The technical data are not binding and can be modified without prior notice | The images are indicative and not binding

EUROFIRE DIESEL
Fire-fighting pressurisation units according to UNI EN 12845
With Horizontal Centrifugal Electric Pumps

HYDRAULIC DIAGRAM

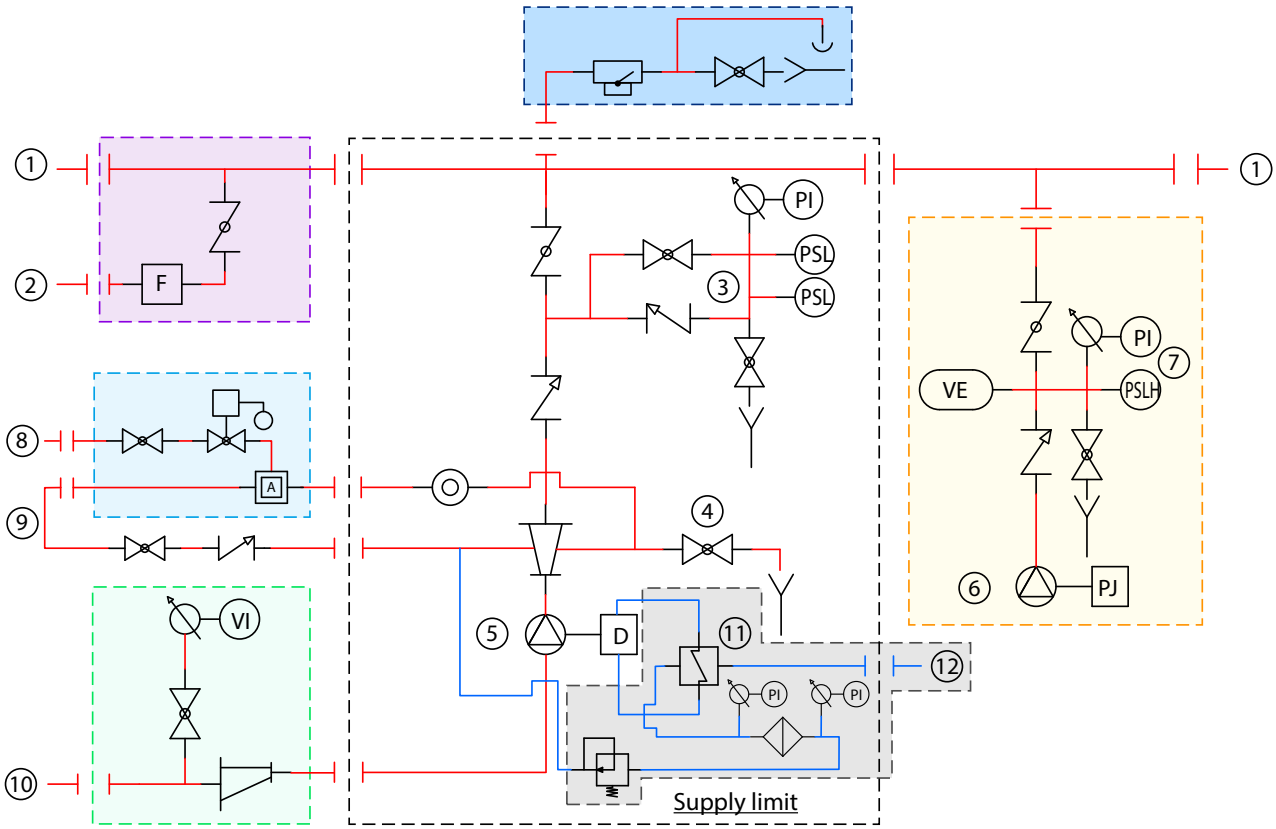

KEY

1. Delivery to the system
2. Return in flow meter tank
3. Pressure switch test circuit
4. Drain valve (leak test)
5. Main pump
6. Jockey pump
7. Jockey pump pressure switch unit
8. Priming tank water supply
9. Priming circuit
10. Intake pipe
11. Water-to-water exchanger circuit
12. Return in heat exchanger tank

Instruments
Piping
Water-to-Water Exchanger Kit Piping

Optional supply

Flow Meter Kit
Jockey Pump kit
Priming kit (negative suction head or
Sprinkler circuit kit
Intake kit
Exchanger circuit only >17,5 kW

	Pump		Normally open ball valve	PSLH	Jockey Pump start/stop pressure switch
E	Main pump electric motor		Normally closed ball valve	PSL	Pump start pressure switch
D	Main pump diesel engine		Throttle valve with handwheel	VI	Vacuum gauge
PJ	Jockey Pump electrical motor		Throttle valve with lever		Water Reserve Tank
	Eccentric cone		Clapet check valve	A	Priming Tank 500 ℓ
	Expansion		Safety valve		EC UNI EN 12259-5 flow switch
VE	Preloaded expansion vessel		Gate valve with handwheel		Pendent sprinkler head 1/2 k=80
PI	Pressure gauge	F	Flowmeter	IF	Flow indicator
	Diaphragm		Open drain		Heat exchanger
	"Y' filter		Pressure reducer		Filling float

Fire-fighting units catalogue - Edition: September-2021

EUROFIRE DIESEL

Fire-fighting pressurisation units according to UNI EN 12845 with Horizontal Centrifugal electric pumps

MAIN COMPONENTS

NEGATIVE SUCTION HEAD VERSION

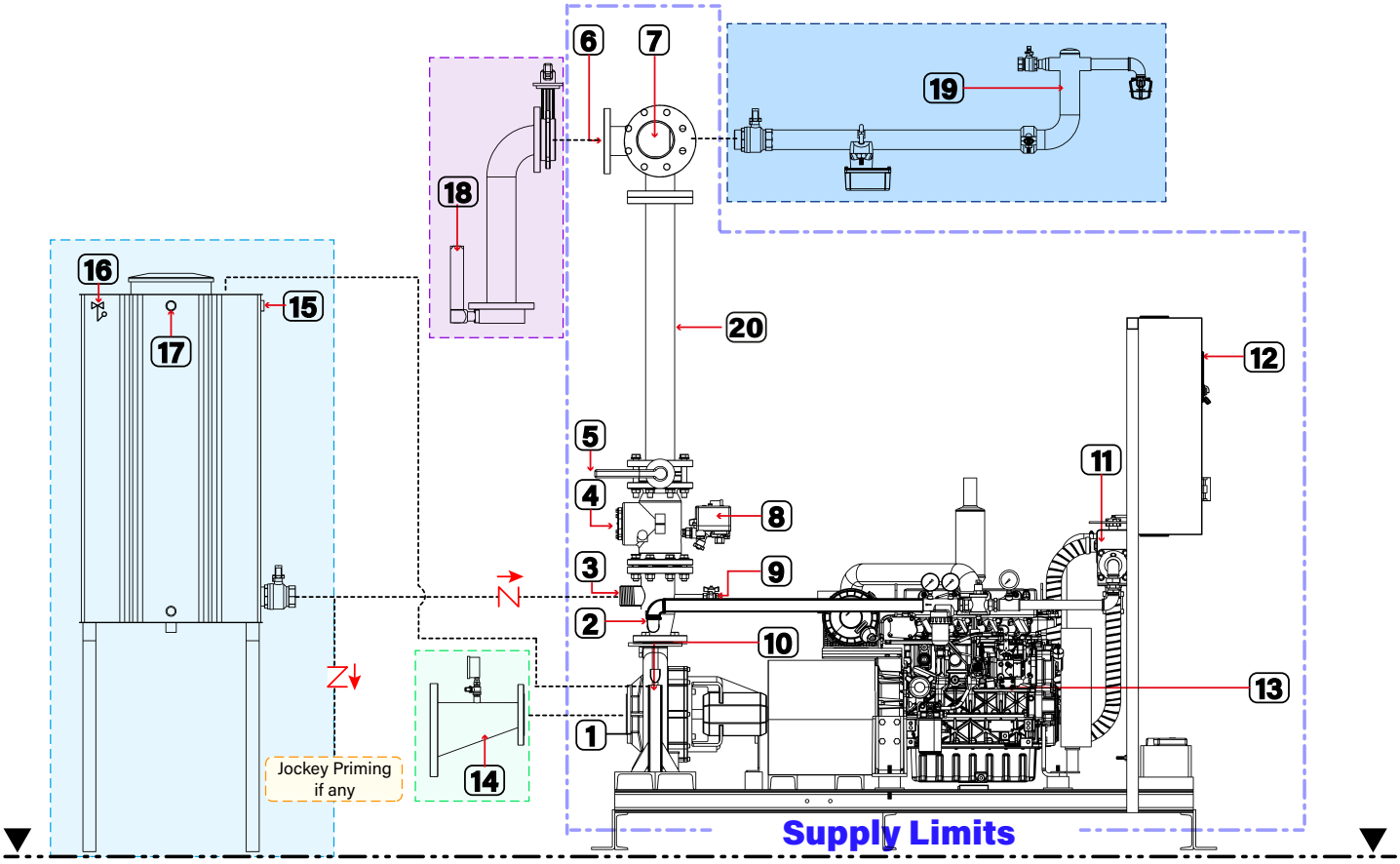

1	Main pump
2	Expansion stub pipe with branches
3	Main pump priming
4	Inspectable check valve
5	Shut-off valve
6	Branch for flow meter (where applicable)
7	Delivery manifold
8	Pressure switches circuit
9	Drain 1/2" diam. - check valve seal check circuit
10	Minimum flow diaphragm
11	Heat exchanger
12	Epro diesel control unit

13	Diesel Engine
14	Eccentric cone
15	Mechanical filling float
16	Electric empty tank alarm float (see panel diagram)
17	Overflow drain to be visibly channelled (while the main pump runs, the overflow drain will allow the water from the diaphragm to come out)
18	Flowmeter kit complete with upstream pipe section L> 5 diam.
19	2" Sprinkler Kit complete with Flow switch in accordance with UNI EN 12259-5
20	Optional extension kit H ≥ 2 m UNI EN 11292

EUROFIRE DIESEL

Fire-fighting pressurisation units according to UNI EN 12845 with Horizontal Centrifugal electric pumps

MAIN COMPONENTS

POSITIVE SUCTION HEAD VERSION

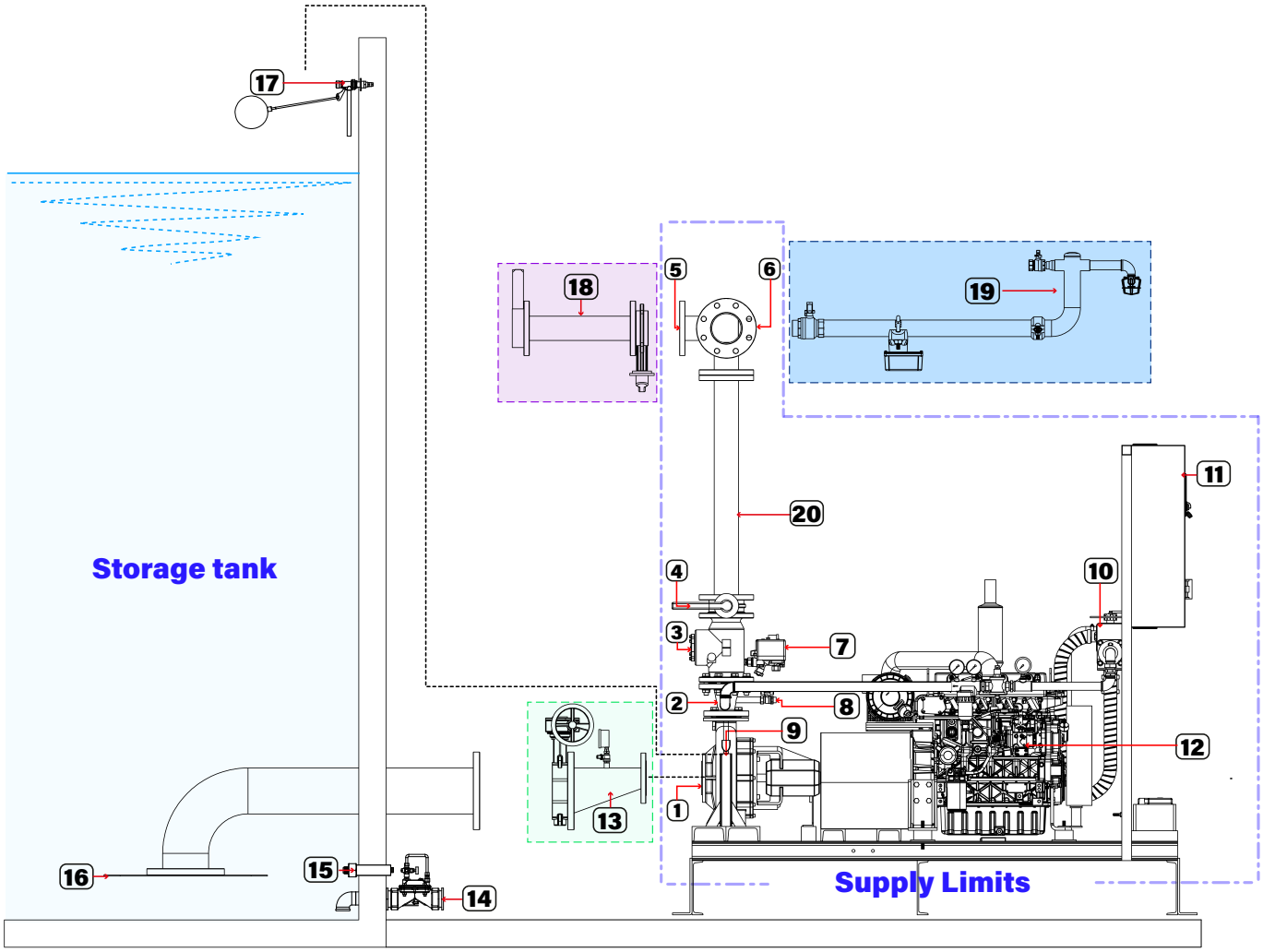

1	Main pump
2	Expansion stub pipe with branches
3	Inspectable check valve
4	Shut-off valve
5	Branch for flow meter (where applicable)
6	Delivery manifold
7	Pressure switch circuit
8	Drain 1/2" diam. - check valve seal check circuit
9	Minimum flow diaphragm
10	Heat exchanger

11	Epro diesel control unit
12	Diesel Engine
13	Eccentric cone
14	Filling water valve
15	Level Transmitter
16	Anti-Vortex Plate
17	Water Valve Float
18	Flowmeter kit complete with upstream pipe section L> 5 diam.
19	2" Sprinkler Kit complete with Flow switch in accordance with UNI EN 12259-5
20	Optional extension kit H ≥ 2 m UNI EN 11292

Fire-fighting units catalogue - Edition: September-2021

EUROFIRE WITH MOTOR PUMP 32-160
UNI EN 12845

iPRO DIESEL

GSM

PERFORMANCE RANGE

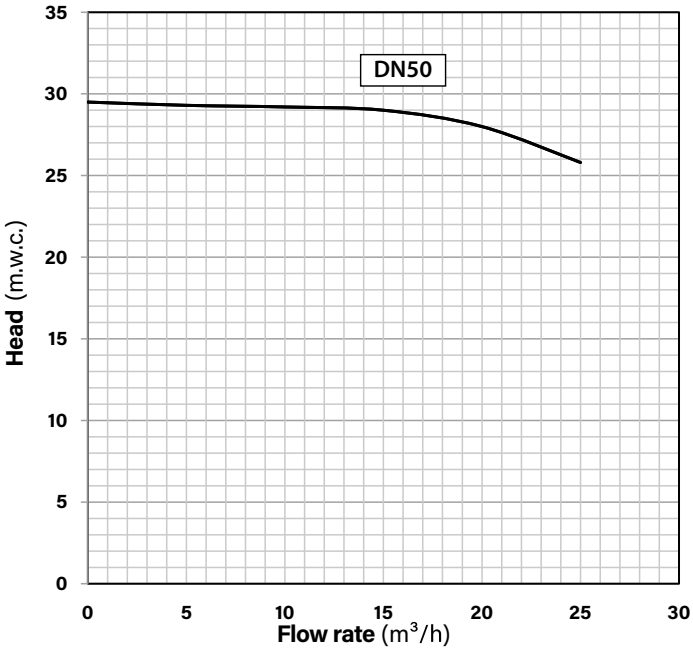

CENTRIFUGAL PUMP

END SUCTION normalised single-impeller centrifuge with **BACK PULL OUT** horizontal shaft, with a spiral diffuser and separate support; axial intake and radial delivery UNI EN 12845 10.1

- Pump body and impeller: EN GJL 250 cast iron
- Shaft: AISI 431 Stainless Steel
- Mechanical seal: Ceramic-Graphite

MOTOR

Top brand endothermic engine with direct air cooling system up to 26.5 kW and greater power outputs with a heat exchanger.
Power calculated based on the power absorbed at the point of the characteristic curve which corresponds to a **NPSH of 16 m UNI EN 12845:2020 10.1**
NA: continuous overloadable power 10% DIN 6271 - ISO 3046-1

HYDRAULIC PUMPS 32-160 EFFICIENCY

Electric Version page 48

Pump Model	Pump ID	Motor		Pump Fittings			Flow Rate - m³/h						
		Electrical	Diesel	Intake	Delivery								
		kW	kW	Ø	Ø		0	5	10	15	20	25	30
32-160/1	010	3	6.2	50	32	H	29.5	29.3	29.2	29.0	28.0	25.8	

The values to the left of the reference refer to the maximum allowed delivery speed of 6 m/sec - The RED values entail speeds higher than 6 m/sec - The Values with GREY background indicate NPSH-R > 5m values.
For installations in HHS-HHP systems, contact our technical department. Nominal hydraulic characteristics of flow rate and head at the pump inlet, with performance tolerances according to UNI EN ISO 9906:2012 Grade 3B

EUROFIRE WITH MOTOR PUMP 32-160
UNI EN 12845

CENTRIFUGAL PUMP

COUPLING JOINT

Pump-motor connection via a cross cardan joint, complete with a safety guard UNI EN 12845 10.1 The cardan joint prevents the transmission of vibrations between the diesel engine and the pipes

KEY

NID	Nom. Intake Diameter
NDD	Nom. Delivery Diameter
NCD	Nom. Column Diameter
NS	Negative suction head set-up
PS	Positive suction head set-up
AD	Only found in the Negative suction head version **NS**

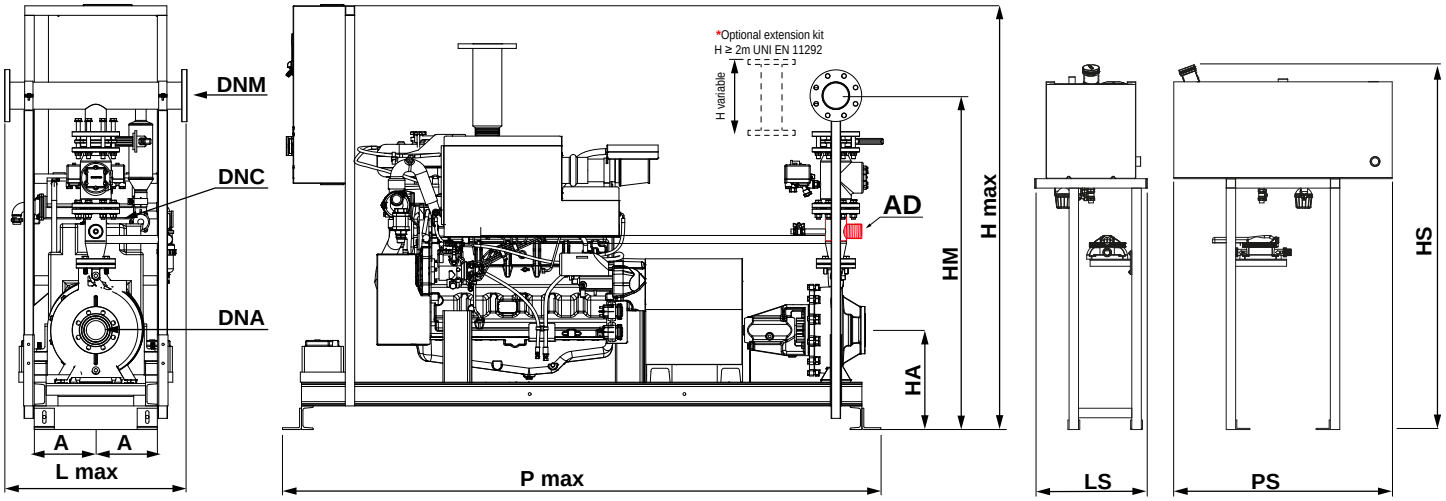

* H rise optional extension ≥ 2m

DIMENSIONS AND WEIGHTS OF EUROFIRE WITH MOTOR PUMPS 32-160

Jockey pumps on page 39

Q max	PRODUCT CODE 32-160				Power Pump	Heat exchange system	NID.	DNM	HA	HM		A	H max	L max	P max	Weight	Tank Diesel			
										SP	ST									
m³/h	COMP..	ID Pump	DNC	HYDRAULIC CONFIG.	kW Diesel		Ø	Ø	mm	mm	mm	mm	mm	mm	mm	kg	Litres	LS	PS	HS
≤ 40	GC0M0	010	050	C /NS - /PS	6.2	Air	50	65	352	1150*	1031*	290	1790	710	1625	400	34	451	514	1180

Fire-fighting units catalogue - Edition: September-2021

EUROFIRE WITH MOTOR PUMP 32-200
UNI EN 12845

iPRO DIESEL

GSM

PERFORMANCE RANGE

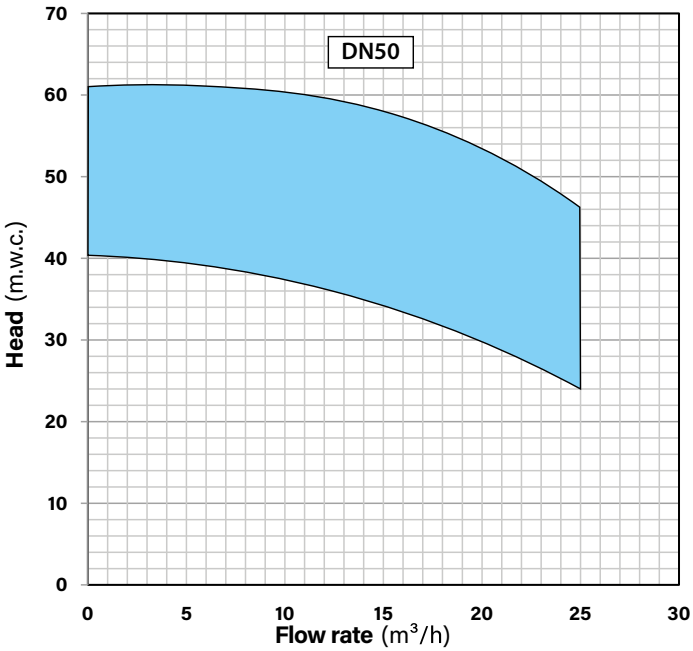

CENTRIFUGAL PUMP

END SUCTION normalised single-impeller centrifuge with **BACK PULL OUT** horizontal shaft, with a spiral diffuser and separate support; axial intake and radial delivery UNI EN 12845 10.1

- Pump body and impeller: EN GJL 250 cast iron
- Shaft: AISI 431 Stainless Steel
- Mechanical seal: Ceramic-Graphite

MOTOR

Top brand endothermic engine with direct air cooling system up to 26.5 kW and greater power outputs with a heat exchanger.
Power calculated based on the power absorbed at the point of the characteristic curve which corresponds to a **NPSH of 16 m UNI EN 12845:2020 10.1**
NA: continuous overloadable power 10% DIN 6271 - ISO 3046-1

HYDRAULIC PUMPS 32-200 EFFICIENCY

Electric Version page 50

Pump Model	Pump ID	Motor		Pump Fittings			Flow Rate - m³/h						
		Electrical	Diesel	Intake	Delivery								
		kW	kW	Ø	Ø		0	5	10	15	20	25	30
32-200/14	020	4	6.2	50	32	H (mwc)	40.5	39	37	34.5	30	24	
32-200/2	025	5.5	6.2	50	32		50	48	46	43	40	37	
32-200/3	026	5.5	6.2	50	32		53	53	51	49	44.5		
32-200/4	027	5.5	6.2	50	32		56	56	54.5	51.5	46.5		
32-200/5	028	7.5	6.2	50	32		54	50.5	48	44.5	41	36	
32-200/8	030	7.5	7	50	32		61	61	60	58	53		
32-200/9	032	7.5	7	50	32		58.5	57.5	56	53	48	43	

The values to the left of the reference refer to the maximum allowed delivery speed of 6 m/sec - The RED values entail speeds higher than 6 m/sec - The Values with GREY background indicate NPSH-R > 5m values.
For installations in HHS-HHP systems, contact our technical department. Nominal hydraulic characteristics of flow rate and head at the pump inlet, with performance tolerances according to UNI EN ISO 9906:2012 Grade 3B

EUROFIRE WITH MOTOR PUMP 32-200
UNI EN 12845

CENTRIFUGAL PUMP

COUPLING JOINT

Pump-motor connection via a cross cardan joint, complete with a safety guard UNI EN 12845 10.1 The cardan joint prevents the transmission of vibrations between the diesel engine and the pipes

KEY

NID	Nom. Intake Diameter
NDD	Nom. Delivery Diameter
NCD	Nom. Column Diameter
NS	Negative suction head set-up
PS	Positive suction head set-up
AD	Only found in the Negative suction head version **NS**

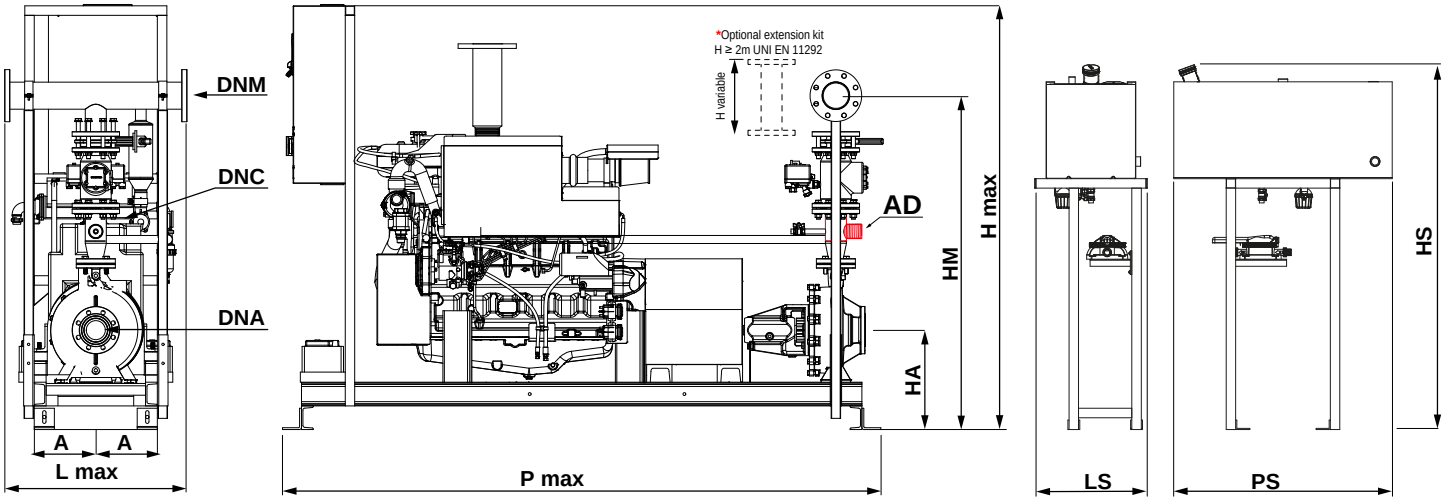

* H rise optional extension ≥ 2m

DIMENSIONS AND WEIGHTS OF EUROFIRE WITH MOTOR PUMPS 32-200

Jockey pumps on page 39

Q max	PRODUCT CODE 32-200					Power Pump	Heat exchange system	NID.	DNM	HA	HM		A	H max	L max	P max	Weight	Tank Diesel			
											SP	ST									
m³/h	COMP..	ID Pump	DNC		HYDRAULIC CONFIG.	kW Diesel		Ø	Ø	mm	mm	mm	mm	mm	mm	mm	kg	Litres	LS	PS	HS
≤ 40	GCOMO	020-025-026-027-028	050	C	/NS - /PS	6.2	Air	50	65	352	1170*	1051*	248	1790	710	1625	410	34	451	514	1180
	GCOMO	030-032	050	C	/NS - /PS	7	Air	50	65	352	1170*	1051*	290	1790	710	1625	443	34	451	514	1180

Fire-fighting units catalogue - Edition: September-2021

EUROFIRE WITH MOTOR PUMP 32-250
UNI EN 12845

iPRO DIESEL

GSM

PERFORMANCE RANGE

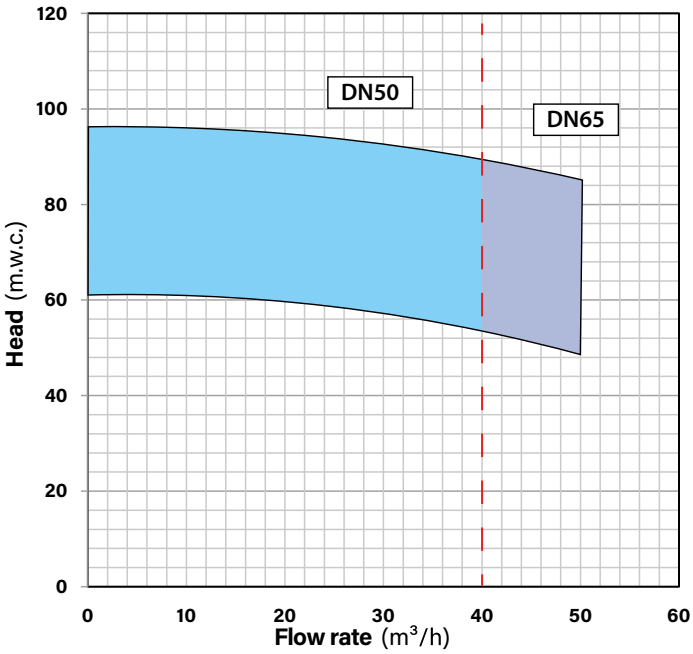

CENTRIFUGAL PUMP

END SUCTION normalised single-impeller centrifuge with **BACK PULL OUT** horizontal shaft, with a spiral diffuser and separate support; axial intake and radial delivery UNI EN 12845 10.1

- Pump body and impeller: EN GJL 250 cast iron
- Shaft: AISI 431 Stainless Steel
- Mechanical seal: Ceramic-Graphite

MOTOR

Top brand endothermic engine with direct air cooling system up to 26.5 kW and greater power outputs with a heat exchanger.
Power calculated based on the power absorbed at the point of the characteristic curve which corresponds to a **NPSH of 16 m UNI EN 12845:2020 10.1**
NA: continuous overloadable power 10% DIN 6271 - ISO 3046-1

HYDRAULIC PUMPS 32-250 EFFICIENCY

Electric Version page 52

Pump Model	Pump ID	Motor		Pump Fittings			Flow Rate - m³/h											
		Electrical	Diesel	Intake	Delivery													
		kW	kW	Ø	Ø		0	5	10	15	20	25	30	35	40	45	50	55
32-250/3	035	11	12.8	50	32	H (mwc)	91	91	89	84	69							
32-250/13	036	15	17.5	50	32		77.5	77	76.5	76	76	74	70					
32-250/5	037	15	17.5	50	32		61	61	61	60.5	60	59	57.5	56	54	52	49	
32-250/7	040	18.5	17.5	50	32		66	66	66	66	65.5	65.5	65	64	62	59.5	56.5	
32-250/11	045	18.5	17.5	50	32		89.5	89.5	89.5	89.5	89	87	83	77				
32-250/8	052	18.5	25.2	50	32		70	70	70	69.5	69	68	67	65.5	64	62	60	
32-250/10	047	18.5	25.2	50	32		96	96	95.5	95	94.5	92	89	83				
32-250/9	050	22	25.2	50	32		78	78	78	78	77	76	75	73.5	72	70	67	
32-250/12	055	30	25.2	50	32		96	95.5	95	94.5	94	93	92	91	89.5	88	85	

The values to the left of the reference refer to the maximum allowed delivery speed of 6 m/sec - The RED values entail speeds higher than 6 m/sec - The Values with GREY background indicate NPSH-R > 5m values.
For installations in HHS-HHP systems, contact our technical department. Nominal hydraulic characteristics of flow rate and head at the pump inlet, with performance tolerances according to UNI EN ISO 9906:2012 Grade 3B

EUROFIRE WITH MOTOR PUMP 32-250
UNI EN 12845

CENTRIFUGAL PUMP

COUPLING JOINT

Pump-motor connection via a cross cardan joint, complete with a safety guard UNI EN 12845 10.1 The cardan joint prevents the transmission of vibrations between the diesel engine and the pipes

KEY

NID	Nom. Intake Diameter
NDD	Nom. Delivery Diameter
NCD	Nom. Column Diameter
NS	Negative suction head set-up
PS	Positive suction head set-up
AD	Only found in the Negative suction head version **NS**

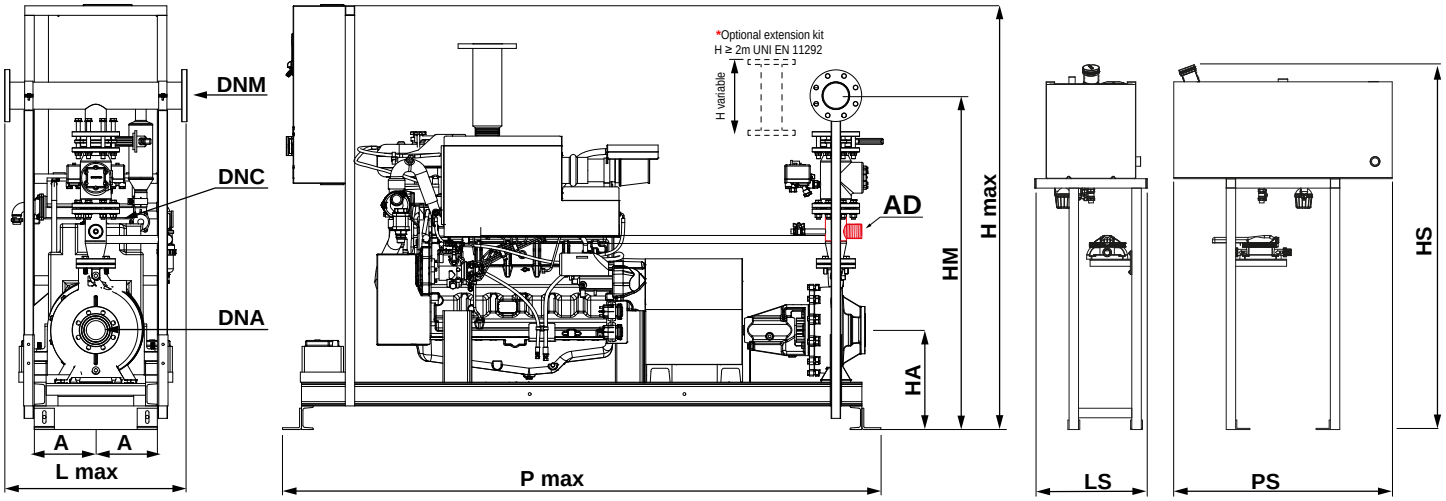

* H rise optional extension ≥ 2m

DIMENSIONS AND WEIGHTS OF EUROFIRE WITH MOTOR PUMPS 32-250

Jockey pumps on page 39

Q max	PRODUCT CODE 32-250					Power Pump	Heat exchange system	NID.	DNM	HA	HM		A	H max	L max	P max	Weight	Tank Diesel			
											SP	ST									
m³/h	COMP..	ID Pump	DNC		HYDRAULIC CONFIG.	kW Diesel		Ø	Ø	mm	mm	mm	mm	mm	mm	mm	kg	Litres	LS	PS	HS
≤ 40	GCOMO	035	050	C	/NS - /PS	12.8	Air	50	65	420	1283*	1164*	290	1790	710	1730	410	34	451	514	1180
	GCOMO	036-037-040-045	050	C	/NS - /PS	17.5	Air	50	65	420	1283*	1164*	270	1790	710	1800	500	34	451	514	1180
	GCOMO	047-050-052-055	050	C	/NS - /PS	25.2	Water/Water	50	65	420	1283*	1164*	305	1790	710	1860	500	50	586	850	1017
< 40	GCOMO	035	065	C	/NS - /PS	12.8	Air	50	80	420	1283*	1164*	290	1790	710	1730	410	34	451	514	1180
	GCOMO	036-037-040-045	065	C	/NS - /PS	17.5	Air	50	80	420	1283*	1164*	270	1790	710	1800	500	34	451	514	1180
	GCOMO	047-050-052-055	065	C	/NS - /PS	25.2	Water/Water	50	80	420	1283*	1164*	305	1790	710	1860	500	50	586	850	1017

Fire-fighting units catalogue - Edition: September-2021

EUROFIRE WITH MOTOR PUMP 40-200
UNI EN 12845

PERFORMANCE RANGE

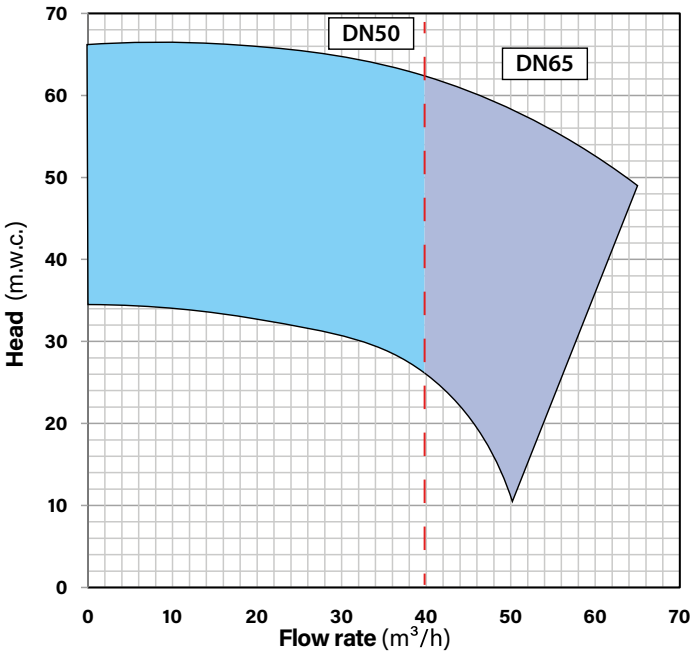

iPRO DIESEL

GSM

CENTRIFUGAL PUMP

END SUCTION normalised single-impeller centrifuge with **BACK PULL OUT** horizontal shaft, with a spiral diffuser and separate support; axial intake and radial delivery UNI EN 12845 10.1

- Pump body and impeller: EN GJL 250 cast iron
- Shaft: AISI 431 Stainless Steel
- Mechanical seal: Ceramic-Graphite

MOTOR

Top brand endothermic engine with direct air cooling system up to 26.5 kW and greater power outputs with a heat exchanger.
Power calculated based on the power absorbed at the point of the characteristic curve which corresponds to a **NPSH of 16 m UNI EN 12845:2020 10.1**
NA: continuous overloadable power 10% DIN 6271 - ISO 3046-1

HYDRAULIC PUMPS 40-200 EFFICIENCY

Electric Version page 54

Pump Model	Pump ID	Motor		Pump Fittings			Flow Rate - m³/h													
		Electrical	Diesel	Intake	Delivery															
		kW	kW	Ø	Ø		0	5	10	15	20	25	30	35	40	45	50	55	60	65
40-200/5	090	5.5	6.2	65	40	H (mwc)	34.5	34	34	33.5	33	32	31	29	26	21	11			
40-200/1	100	7.5	6.2	65	40		43	42	41.5	41	39.5	37.5	35	30	23.5					
40-200/2	103	7.5	7	65	40		47.5	47.5	47	46	45	43	40	36	31					
40-200/3	105	11	10.5	65	40		65	65	64.5	64	63	61.5	59	55	49.5					
40-200/4	110	11	10.5	65	40		58	57.5	57	56.5	56	55	54	52.5	50.5	48	45			
40-200/6	115	15	12.8	65	40		63	63	63	63	62.5	61.5	60	58	55.5	52	48			
40-200/7	116	15	17.5	65	40		66	66	66	66	66	65.5	65	64	62	60	58	55	52	49

The values to the left of the reference refer to the maximum allowed delivery speed of 6 m/sec - The RED values entail speeds higher than 6 m/sec - The Values with GREY background indicate NPSH-R > 5m values.
For installations in HHS-HHP systems, contact our technical department. Nominal hydraulic characteristics of flow rate and head at the pump inlet, with performance tolerances according to UNI EN ISO 9906:2012 Grade 3B

EUROFIRE WITH MOTOR PUMP 40-200
UNI EN 12845

CENTRIFUGAL PUMP

COUPLING JOINT

Pump-motor connection via a cross cardan joint, complete with a safety guard UNI EN 12845 10.1 The cardan joint prevents the transmission of vibrations between the diesel engine and the pipes

KEY

NID	Nom. Intake Diameter
NDD	Nom. Delivery Diameter
NCD	Nom. Column Diameter
NS	Negative suction head set-up
PS	Positive suction head set-up
AD	Only found in the Negative suction head version **NS**

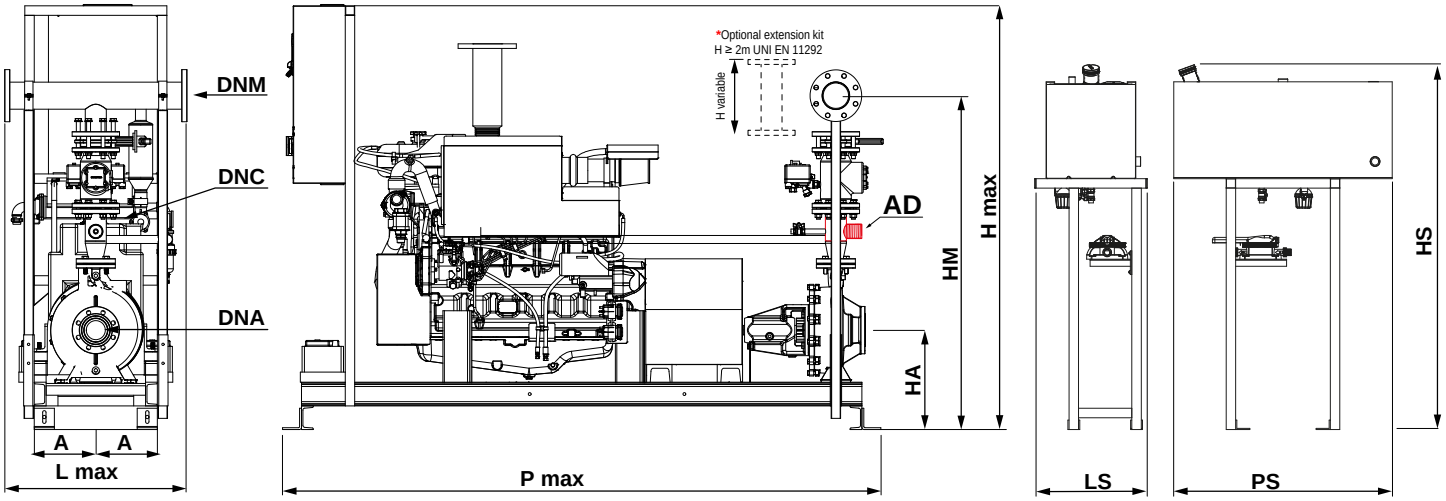

* H rise optional extension ≥ 2m

DIMENSIONS AND WEIGHTS OF EUROFIRE WITH MOTOR PUMPS 40-200

Jockey pumps on page 39

Q max	PRODUCT CODE 40-200					Power Pump	Heat exchange system	NID.	DNM	HA	HM		A	H max	L max	P max	Weight	Tank Diesel			
											SP	ST									
m³/h	COMP..	ID Pump	DNC		HYDRAULIC CONFIG.	kW Diesel		Ø	Ø	mm	mm	mm	mm	mm	mm	mm	kg	Litres	LS	PS	HS
≤ 40	GCOMO	090-100	050	C	/NS - /PS	6.2	Air	65	65	352	1159*	1051*	248	1790	710	1625	573	34	451	514	1180
	GCOMO	103	050	C	/NS - /PS	7	Air	65	65	352	1159*	1051*	290	1790	710	1625	445	34	451	514	1180
	GCOMO	105-110	050	C	/NS - /PS	10.5	Air	65	65	352	1159*	1051*	290	1790	710	1670	460	34	451	514	1180
	GCOMO	115	050	C	/NS - /PS	12.8	Air	65	65	352	1159*	1051*	290	1790	710	1730	475	34	451	514	1180
	GCOMO	116	050	C	/NS - /PS	17.5	Air	65	65	352	1405*	1276*	240	1690	1060	1481	475	34	451	514	1180
≤ 40	GCOMO	090-100	065	D	/NS - /PS	6.2	Air	65	80	352	1218*	1108*	248	1790	710	1625	573	34	451	514	1180
	GCOMO	103	065	D	/NS - /PS	7	Air	65	80	352	1218*	1108*	290	1790	710	1625	445	34	451	514	1180
	GCOMO	105-110	065	D	/NS - /PS	10.5	Air	65	80	352	1218*	1108*	290	1790	710	1670	460	34	451	514	1180
	GCOMO	115	065	D	/NS - /PS	12.8	Air	65	80	352	1218*	1108*	290	1790	710	1730	475	34	451	514	1180
	GCOMO	116	065	D	/NS - /PS	17.5	Air	65	80	352	1405*	1276*	240	1690	1060	1481	475	34	451	514	1180

Fire-fighting units catalogue - Edition: September-2021

EUROFIRE WITH MOTOR PUMP 40-250
UNI EN 12845

iPRO DIESEL

GSM

PERFORMANCE RANGE

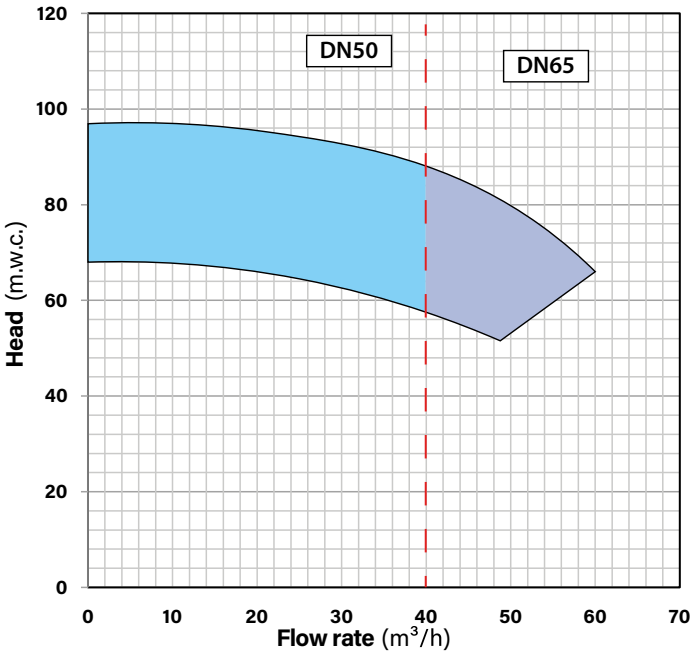

CENTRIFUGAL PUMP

END SUCTION normalised single-impeller centrifuge with **BACK PULL OUT** horizontal shaft, with a spiral diffuser and separate support; axial intake and radial delivery UNI EN 12845 10.1

- Pump body and impeller: EN GJL 250 cast iron
- Shaft: AISI 431 Stainless Steel
- Mechanical seal: Ceramic-Graphite

MOTOR

Top brand endothermic engine with direct air cooling system up to 26.5 kW and greater power outputs with a heat exchanger.
Power calculated based on the power absorbed at the point of the characteristic curve which corresponds to a **NPSH of 16 m UNI EN 12845:2020 10.1**
NA: continuous overloadable power 10% DIN 6271 - ISO 3046-1

HYDRAULIC PUMPS 40-250 EFFICIENCY

Electric Version page 56

Pump Model	Pump ID	Motor		Pump Fittings			Flow Rate - m³/h													
		Electrical	Diesel	Intake	Delivery															
		kW	kW	Ø	Ø		0	5	10	15	20	25	30	35	40	45	50	55	60	65
40-250/5	140	15	17.5	65	40	H (mwc)	69	68.5	68	67	66	64.5	62	60	57.5	55				
40-250/6	145	18.5	17.5	65	40		80	80	80	80	80	80	80	79	78	76	74	71	60	
40-250/7	150	18.5	17.5	65	40		75	74.5	74	73	71.5	70	67.5	65	62.5	59.5				
40-250/9	160	18.5	25.2	65	40		79	78.5	78	77	75.5	74	72	70	68	65	62			
40-250/10	165	22	25.2	65	40		92	91	90	89	88	86.5	85	83	81	78	74			
40-250/12	170	22	25.2	65	40		90	90	89.7	89.5	89	88.5	87.5	86	84	81	77.5	72	66	
40-250/13	180	30	25.2	65	40		97	96.5	96	95.5	95	94	92	90	87	83	79	74		

The values to the left of the reference refer to the maximum allowed delivery speed of 6 m/sec - The RED values entail speeds higher than 6 m/sec - The Values with GREY background indicate NPSH-R > 5m values.
For installations in HHS-HHP systems, contact our technical department. Nominal hydraulic characteristics of flow rate and head at the pump inlet, with performance tolerances according to UNI EN ISO 9906:2012 Grade 3B

EUROFIRE WITH MOTOR PUMP 40-250
UNI EN 12845

CENTRIFUGAL PUMP

COUPLING JOINT

Pump-motor connection via a cross cardan joint, complete with a safety guard UNI EN 12845 10.1 The cardan joint prevents the transmission of vibrations between the diesel engine and the pipes

KEY

NID	Nom. Intake Diameter
NDD	Nom. Delivery Diameter
NCD	Nom. Column Diameter
NS	Negative suction head set-up
PS	Positive suction head set-up
AD	Only found in the Negative suction head version **NS**

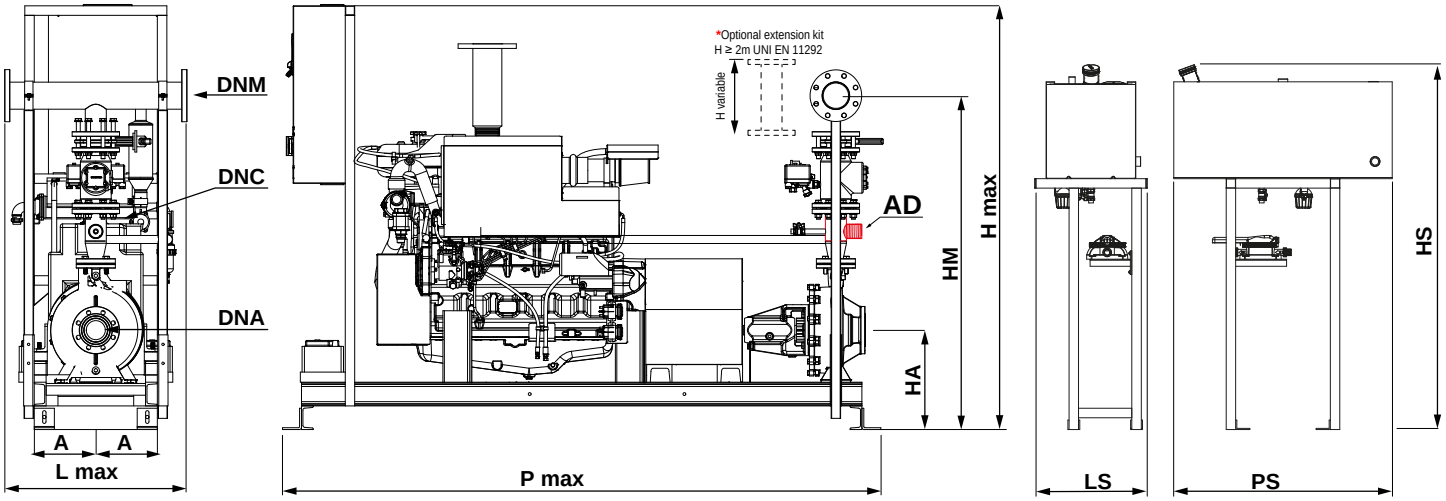

* H rise optional extension ≥ 2m

DIMENSIONS AND WEIGHTS OF EUROFIRE WITH MOTOR PUMPS 40-250

Jockey pumps on page 39

Q max	PRODUCT CODE 40-250					Power Pump	Heat exchange system	NID.	DNM	HA	HM		A	H max	L max	P max	Weight	Tank Diesel			
											SP	ST									
m³/h	COMP..	ID Pump	DNC		HYDRAULIC CONFIG.	kW Diesel		Ø	Ø	mm	mm	mm	mm	mm	mm	mm	kg	Litres	LS	PS	HS
≤ 40	GCOMO	140-145-150	050	C	/NS - /PS	17.5	Air	65	65	420	1272*	1164*	320	1790	710	1800	516	34	451	514	1180
	GCOMO	160-165-170-180	050	C	/NS - /PS	25.2	Water/Water	65	65	420	1272*	1164*	305	1790	710	1860	576	50	586	850	1017
> 40	GCOMO	140-145-150	065	D	/NS - /PS	17.5	Air	65	80	420	1331*	1221*	320	1790	710	1800	526	34	451	514	1180
	GCOMO	160-165-170-180	065	D	/NS - /PS	25.2	Water/Water	65	80	420	1331*	1221*	305	1790	710	1860	586	50	586	850	1017

Fire-fighting units catalogue - Edition: September-2021

EUROFIRE WITH MOTOR PUMP 40-315
UNI EN 12845

iPRO DIESEL

GSM

PERFORMANCE RANGE

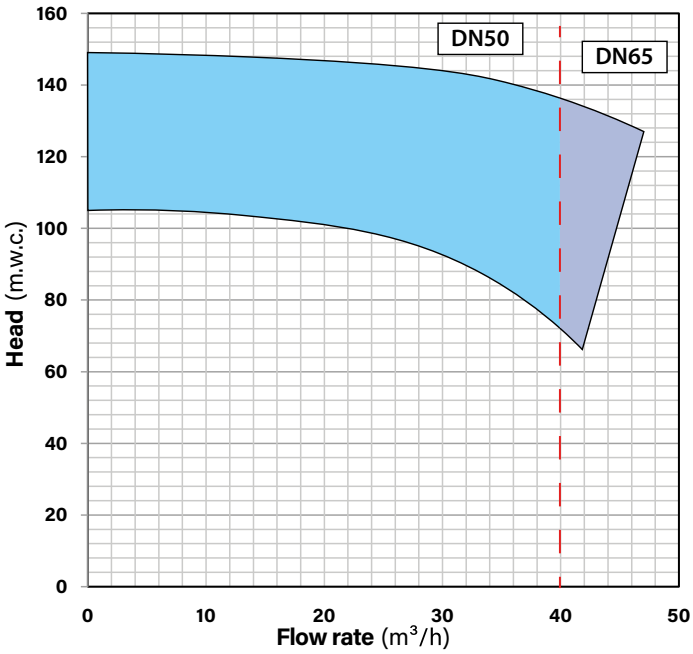

CENTRIFUGAL PUMP

END SUCTION normalised single-impeller centrifuge with **BACK PULL OUT** horizontal shaft, with a spiral diffuser and separate support; axial intake and radial delivery UNI EN 12845 10.1

- Pump body and impeller: EN GJL 250 cast iron
- Shaft: AISI 431 Stainless Steel
- Mechanical seal: Ceramic-Graphite

MOTOR

Top brand endothermic engine with direct air cooling system up to 26.5 kW and greater power outputs with a heat exchanger.
Power calculated based on the power absorbed at the point of the characteristic curve which corresponds to a **NPSH of 16 m UNI EN 12845:2020 10.1**
NA: continuous overloadable power 10% DIN 6271 - ISO 3046-1

HYDRAULIC PUMPS 40-315 EFFICIENCY

Electric Version page 58

Pump Model	Pump ID	Motor		Pump Fittings			Flow Rate - m³/h										
		Electrical	Diesel	Intake	Delivery												
		kW	kW	Ø	Ø		0	5	10	15	20	25	30	35	40	45	50
40-315/1	181	22	25.2	65	40	H (mwc)	105	104.5	104	103	101	98	93.5	85	72		
40-315/2	182	30	25.2	65	40		121	120.5	120	119	117.5	115.5	111.5	105	98	88	
40-315/3	184	30	36.5	65	40		128	127.5	127	126	125	123.5	120.5	116	109	99	
40-315/4	183	37	36.5	65	40		132	132	131.5	131	130	129	126	122	115	106.5	
40-315/5	186	37	36.5	65	40		149	148.5	148	147.5	146.5	145.5	144	141	136	130	
40-315/6	185	55	66	65	40		126	126.5	127	127.5	128	128.5	129	129	129	129	

The values to the left of the reference refer to the maximum allowed delivery speed of 6 m/sec - The RED values entail speeds higher than 6 m/sec - The Values with GREY background indicate NPSH-R > 5m values.
For installations in HHS-HHP systems, contact our technical department. Nominal hydraulic characteristics of flow rate and head at the pump inlet, with performance tolerances according to UNI EN ISO 9906:2012 Grade 3B

EUROFIRE WITH MOTOR PUMP 40-315
UNI EN 12845

CENTRIFUGAL PUMP

COUPLING JOINT

Pump-motor connection via a cross cardan joint, complete with a safety guard UNI EN 12845 10.1 The cardan joint prevents the transmission of vibrations between the diesel engine and the pipes

KEY

NID	Nom. Intake Diameter
NDD	Nom. Delivery Diameter
NCD	Nom. Column Diameter
NS	Negative suction head set-up
PS	Positive suction head set-up
AD	Only found in the Negative suction head version **NS**

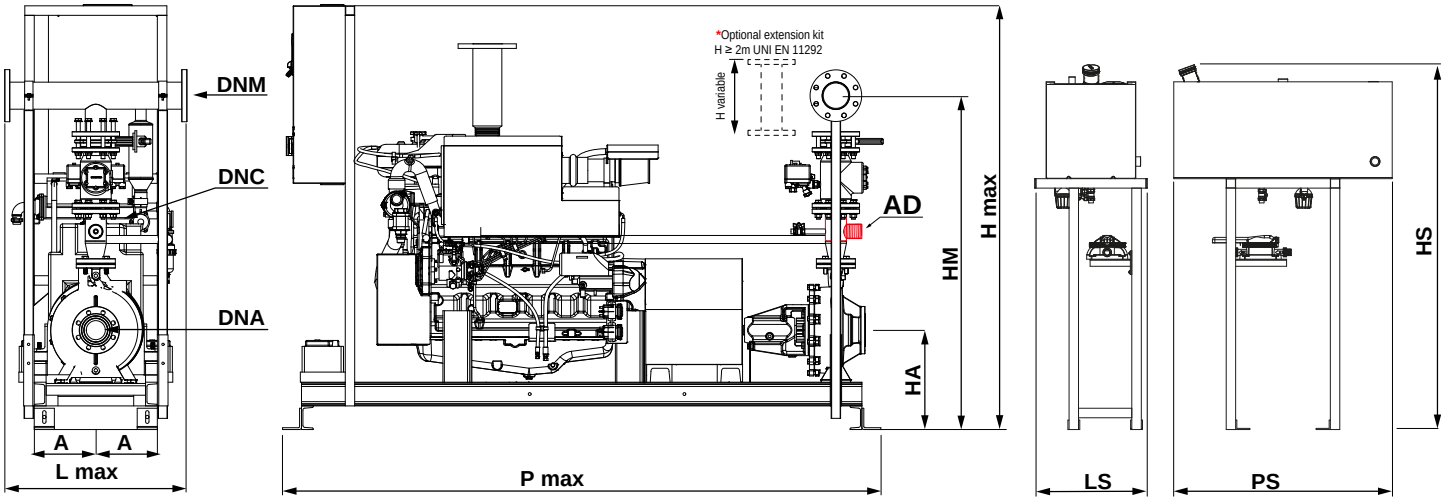

* H rise optional extension ≥ 2m

DIMENSIONS AND WEIGHTS OF EUROFIRE WITH MOTOR PUMPS 40-315

Jockey pumps on page 39

Q max	PRODUCT CODE 40-315					Power Pump	Heat exchange system	NID.	DNM	HA	HM		A	H max	L max	P max	Weight	Tank Diesel			
											SP	ST									
m³/h	COMP..	ID Pump	DNC		HYDRAULIC CONFIG.	kW Diesel		Ø	Ø	mm	mm	mm	mm	mm	mm	mm	kg	Litres	LS	PS	HS
≤ 40	GCOMO	181-182	050	C	/NS - /PS	25.2	Water/Water	65	65	420	1297*	1189*	340	1790	710	2140	605	50	586	850	1017
	GCOMO	183-184-186	050	C	/NS - /PS	36.5	Water/Water	65	65	420	1297*	1189*	325	1790	710	2190	660	80	585	850	1037
	GCOMO	185	050	C	/NS - /PS	66	Water/Water	65	65	470	1347*	1239*	325	1790	710	2295	747	125	486	920	1407
> 40	GCOMO	181-182	065	D	/NS - /PS	25.2	Water/Water	65	80	420	1356*	1246*	340	1790	710	2140	615	50	586	850	1017
	GCOMO	183-184-186	065	D	/NS - /PS	36.5	Water/Water	65	80	420	1356*	1246*	325	1790	710	2190	670	80	585	850	1037
	GCOMO	185	065	D	/NS - /PS	66	Water/Water	65	80	470	1406*	1296*	325	1790	710	2295	757	125	486	920	1407

Fire-fighting units catalogue - Edition: September-2021

EUROFIRE WITH MOTOR PUMP 50-160
UNI EN 12845

iPRO DIESEL

GSM

PERFORMANCE RANGE

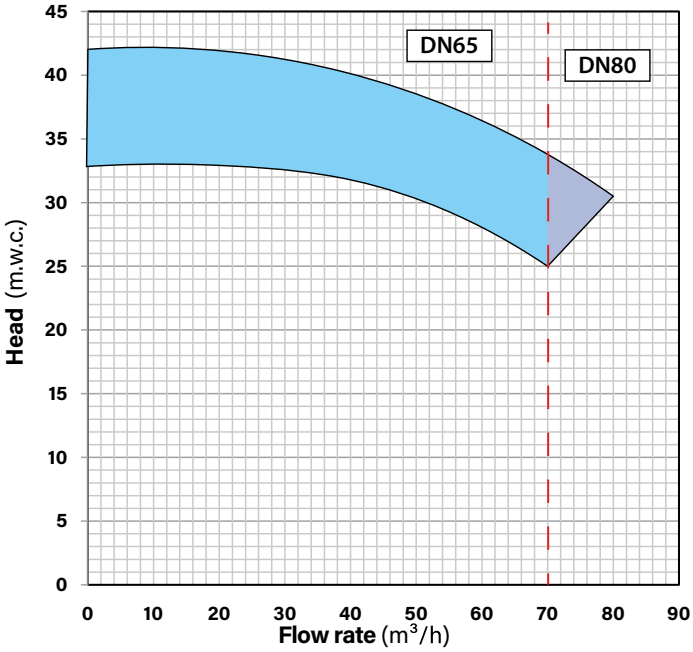

CENTRIFUGAL PUMP

END SUCTION normalised single-impeller centrifuge with **BACK PULL OUT** horizontal shaft, with a spiral diffuser and separate support; axial intake and radial delivery UNI EN 12845 10.1

- Pump body and impeller: EN GJL 250 cast iron
- Shaft: AISI 431 Stainless Steel
- Mechanical seal: Ceramic-Graphite

MOTOR

Top brand endothermic engine with direct air cooling system up to 26.5 kW and greater power outputs with a heat exchanger.
Power calculated based on the power absorbed at the point of the characteristic curve which corresponds to a **NPSH of 16 m UNI EN 12845:2020 10.1**
NA: continuous overloadable power 10% DIN 6271 - ISO 3046-1

HYDRAULIC PUMPS 50-160 EFFICIENCY

Electric Version page 60

Pump Model	Pump ID	Motor		Pump Fittings			Flow Rate - m³/h									
		Electrical	Diesel	Intake	Delivery											
		kW	kW	Ø	Ø		0	10	20	30	40	50	60	70	80	90
50-160/1	192	7.5	7	65	50	H (mwc)	33	33	33	32.5	32	30.5	28	25		
50-160/2	194	11	10.5	65	50		42	42	41.5	41	40	38	36	33.5	30.5	

The values to the left of the reference refer to the maximum allowed delivery speed of 6 m/sec - The RED values entail speeds higher than 6 m/sec - The Values with GREY background indicate NPSH-R > 5m values.
For installations in HHS-HHP systems, contact our technical department. Nominal hydraulic characteristics of flow rate and head at the pump inlet, with performance tolerances according to UNI EN ISO 9906:2012 Grade 3B

EUROFIRE WITH MOTOR PUMP 50-160
UNI EN 12845

CENTRIFUGAL PUMP

COUPLING JOINT

Pump-motor connection via a cross cardan joint, complete with a safety guard UNI EN 12845 10.1 The cardan joint prevents the transmission of vibrations between the diesel engine and the pipes

KEY

NID	Nom. Intake Diameter
NDD	Nom. Delivery Diameter
NCD	Nom. Column Diameter
NS	Negative suction head set-up
PS	Positive suction head set-up
AD	Only found in the Negative suction head version **NS**

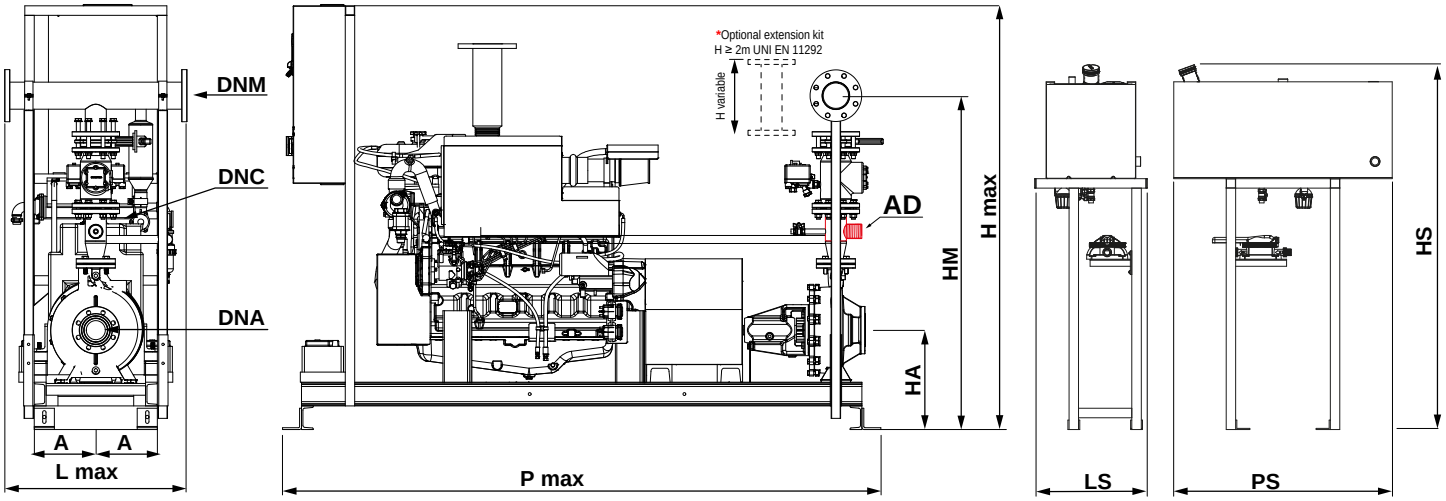

* H rise optional extension ≥ 2m

DIMENSIONS AND WEIGHTS OF EUROFIRE WITH MOTOR PUMPS 50-160

Jockey pumps on page 39

Q max	PRODUCT CODE 50-160					Power Pump	Heat exchange system	NID.	DNM	HA	HM		A	H max	L max	P max	Weight	Tank Diesel			
											SP	ST									
m³/h	COMP..	ID Pump	DNC		HYDRAULIC CONFIG.	kW Diesel		Ø	Ø	mm	mm	mm	mm	mm	mm	mm	kg	Litres	LS	PS	HS
≤ 70	GCOMO	192	065	D	/NS - /PS	7.5	Air	65	80	352	1218*	1108*	290	1790	710	1625	452	34	451	514	1180
	GCOMO	194	065	D	/NS - /PS	10.5	Air	65	80	352	1218*	1108*	290	1790	710	1670	467	34	451	514	1180
> 70	GCOMO	192	080	E	/NS - /PS	7.5	Air	65	100	352	1242*	1132*	290	1790	770	1625	552	34	451	514	1180
	GCOMO	194	080	E	/NS - /PS	10.5	Air	65	100	352	1242*	1132*	290	1790	770	1670	567	34	451	514	1180

Fire-fighting units catalogue - Edition: September-2021

EUROFIRE WITH MOTOR PUMP 50-200
UNI EN 12845

iPRO DIESEL

GSM

PERFORMANCE RANGE

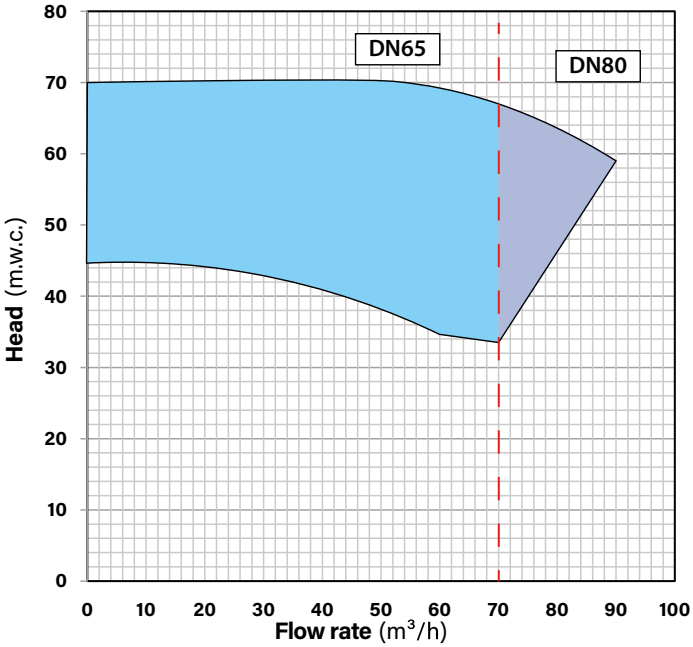

CENTRIFUGAL PUMP

END SUCTION normalised single-impeller centrifuge with **BACK PULL OUT** horizontal shaft, with a spiral diffuser and separate support; axial intake and radial delivery UNI EN 12845 10.1

- Pump body and impeller: EN GJL 250 cast iron
- Shaft: AISI 431 Stainless Steel
- Mechanical seal: Ceramic-Graphite

MOTOR

Top brand endothermic engine with direct air cooling system up to 26.5 kW and greater power outputs with a heat exchanger.
Power calculated based on the power absorbed at the point of the characteristic curve which corresponds to a **NPSH of 16 m UNI EN 12845:2020 10.1**
NA: continuous overloadable power 10% DIN 6271 - ISO 3046-1

HYDRAULIC PUMPS 50-200 EFFICIENCY

Electric Version page 62

Pump Model	Pump ID	Motor		Pump Fittings			Flow Rate - m³/h										
		Electrical	Diesel	Intake	Delivery												
		kW	kW	Ø	Ø		0	10	20	30	40	50	60	70	80	90	100
50-200/1	200	11	10.5	65	50	H (mwc)	45	45	44.5	43.5	42.5	40	35				
50-200/2	205	15	12.8	65	50		51	51	50.5	50	48.5	45	40.5	33.5			
50-200/3	210	15	17.5	65	50		58	58	58	58	56	53	50				
50-200/6	215	18.5	17.5	65	50		61	61	60.5	59	57.5	55.5	53	49.5			
50-200/4	220	22	25.2	65	50		67.5	67.5	67	66	64.5	62.5	60.5	58	54		
50-200/5	230	22	25.2	65	50		70	70	70	70	70	70	69	66.5	63	59	

The values to the left of the reference refer to the maximum allowed delivery speed of 6 m/sec - The RED values entail speeds higher than 6 m/sec - The Values with GREY background indicate NPSH-R > 5m values.
For installations in HHS-HHP systems, contact our technical department. Nominal hydraulic characteristics of flow rate and head at the pump inlet, with performance tolerances according to UNI EN ISO 9906:2012 Grade 3B

EUROFIRE WITH MOTOR PUMP 50-200
UNI EN 12845

CENTRIFUGAL PUMP

COUPLING JOINT

Pump-motor connection via a cross cardan joint, complete with a safety guard UNI EN 12845 10.1 The cardan joint prevents the transmission of vibrations between the diesel engine and the pipes

KEY

NID	Nom. Intake Diameter
NDD	Nom. Delivery Diameter
NCD	Nom. Column Diameter
NS	Negative suction head set-up
PS	Positive suction head set-up
AD	Only found in the Negative suction head version **NS**

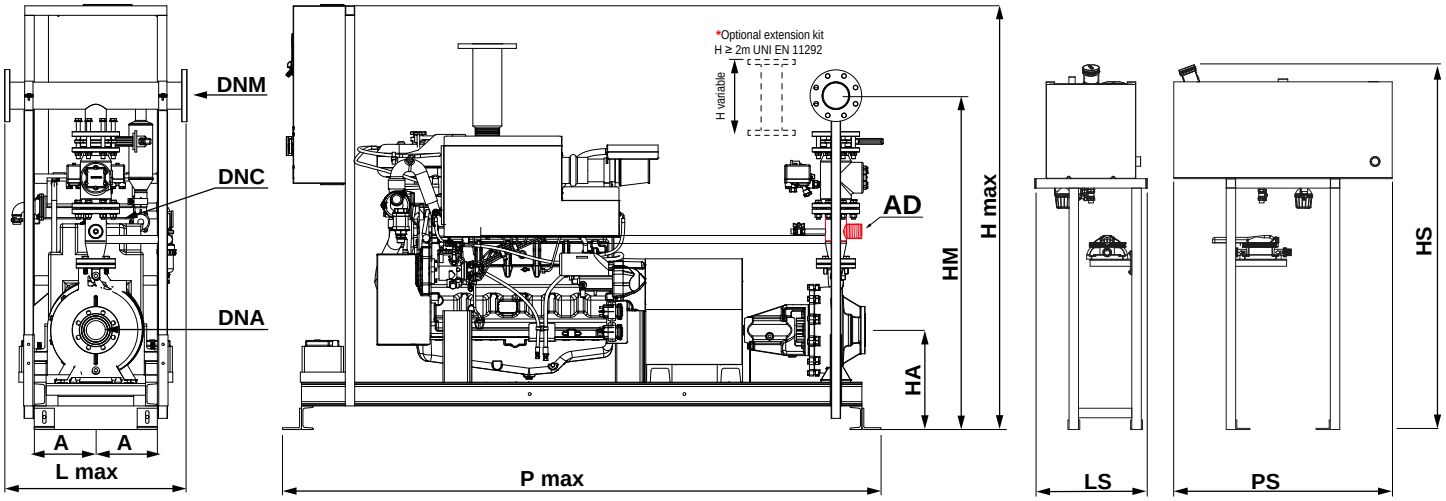

* H rise optional extension ≥ 2m

DIMENSIONS AND WEIGHTS OF EUROFIRE WITH MOTOR PUMPS 50-200

Jockey pumps on page 39

Q max	PRODUCT CODE 50-200					Power Pump	Heat exchange system	NID.	DNM	HA	HM		A	H max	L max	P max	Weight	Tank Diesel			
											SP	ST									
m³/h	COMP..	ID Pump	DNC		HYDRAULIC CONFIG.	kW Diesel		Ø	Ø	mm	mm	mm	mm	mm	mm	mm	kg	Litres	LS	PS	HS
≤ 70	GCOMO	200	065	D	/NS - /PS	10.5	Air	65	80	352	1238*	1128*	290	1790	710	1670	473	34	451	514	1180
	GCOMO	205	065	D	/NS - /PS	12.8	Air	65	80	352	1238*	1128*	290	1790	710	1730	488	34	451	514	1180
	GCOMO	210-215	065	D	/NS - /PS	17.5	Air	65	80	420	1306*	1196*	325	1790	710	1800	520	34	451	514	1180
	GCOMO	220-230	065	D	/NS - /PS	25.2	Water/Water	65	80	420	1306*	1196*	305	1790	710	1780	580	50	586	850	1017
> 70	GCOMO	200	080	E	/NS - /PS	10.5	Air	65	100	352	1262*	1152*	290	1790	770	1670	503	34	451	514	1180
	GCOMO	205	080	E	/NS - /PS	12.8	Air	65	100	352	1262*	1152*	290	1790	770	1730	532	34	451	514	1180
	GCOMO	210-215	080	E	/NS - /PS	17.5	Air	65	100	420	1330*	1220*	325	1790	770	1800	560	34	451	514	1180
	GCOMO	220-230	080	E	/NS - /PS	25.2	Water/Water	65	100	420	1330*	1220*	305	1790	770	1780	620	50	586	850	1017

Fire-fighting units catalogue - Edition: September-2021

EUROFIRE WITH MOTOR PUMP 50-250
UNI EN 12845

iPRO DIESEL

GSM

PERFORMANCE RANGE

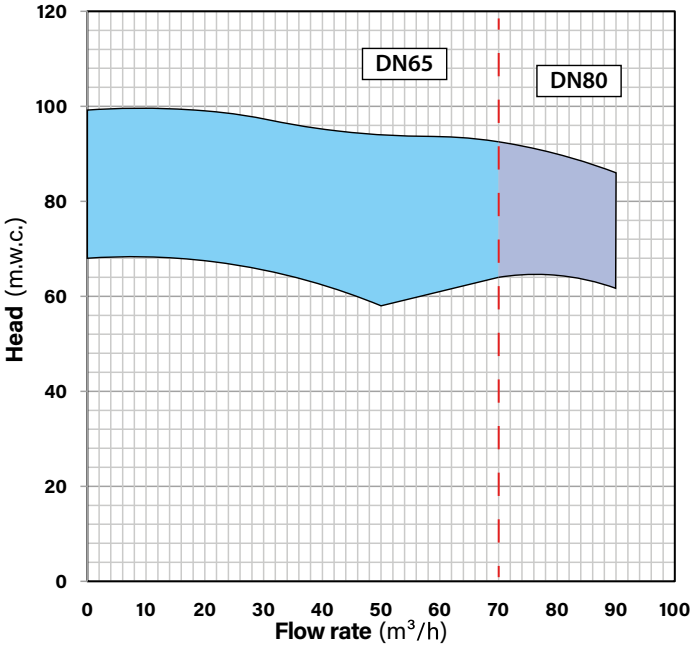

CENTRIFUGAL PUMP

END SUCTION normalised single-impeller centrifuge with **BACK PULL OUT** horizontal shaft, with a spiral diffuser and separate support; axial intake and radial delivery UNI EN 12845 10.1

- Pump body and impeller: EN GJL 250 cast iron
- Shaft: AISI 431 Stainless Steel
- Mechanical seal: Ceramic-Graphite

MOTOR

Top brand endothermic engine with direct air cooling system up to 26.5 kW and greater power outputs with a heat exchanger.
Power calculated based on the power absorbed at the point of the characteristic curve which corresponds to a **NPSH of 16 m UNI EN 12845:2020 10.1**
NA: continuous overloadable power 10% DIN 6271 - ISO 3046-1

HYDRAULIC PUMPS 50-250 EFFICIENCY

Electric Version page 64

Pump Model	Pump ID	Motor		Pump Fittings			Flow Rate - m³/h										
		Electrical	Diesel	Intake	Delivery												
		kW	kW	Ø	Ø		0	10	20	30	40	50	60	70	80	90	100
50-250/8	240	18.5	25.2	65	50	H (mwc)	68.5	68	67.5	66	63	58					
50-250/3	250	22	25.2	65	50		77	76.5	75.5	74	72	70	67.5	64			
50-250/9	255	22	25.2	65	50		78	77.5	76.5	75	72	68	62				
50-250/5	242	30	25.2	65	50		89	88	87	86.5	85	83	80	76	70.5		
50-250/11	243	30	25.2	65	50		87	86.5	86	85.5	85	83.5	80	76	72	70	
50-250/6	260	30	25.2	65	50		94.5	94	93.5	93	91.5	88.5	84	76			
50-250/13	267	30	25.2	65	50		72	72	72	72	72	72	72	68	66	62	
50-250/7	270	30	36.5	65	50		98	97.5	97	95.5	94	92.5	90	86.5	81		
50-250/10	265	30	36.5	65	50		99	98.7	98.5	96.7	95	92	86	80			
50-250/12	266	37	36.5	65	50		94	94	94	94	94	94	93	92	90	86	

The values to the left of the reference refer to the maximum allowed delivery speed of 6 m/sec - The RED values entail speeds higher than 6 m/sec - The Values with GREY background indicate NPSH-R > 5m values.
For installations in HHS-HHP systems, contact our technical department. Nominal hydraulic characteristics of flow rate and head at the pump inlet, with performance tolerances according to UNI EN ISO 9906:2012 Grade 3B

EUROFIRE WITH MOTOR PUMP 50-250
UNI EN 12845

CENTRIFUGAL PUMP

COUPLING JOINT

Pump-motor connection via a cross cardan joint, complete with a safety guard UNI EN 12845 10.1 The cardan joint prevents the transmission of vibrations between the diesel engine and the pipes

KEY

NID	Nom. Intake Diameter
NDD	Nom. Delivery Diameter
NCD	Nom. Column Diameter
NS	Negative suction head set-up
PS	Positive suction head set-up
AD	Only found in the Negative suction head version **NS**

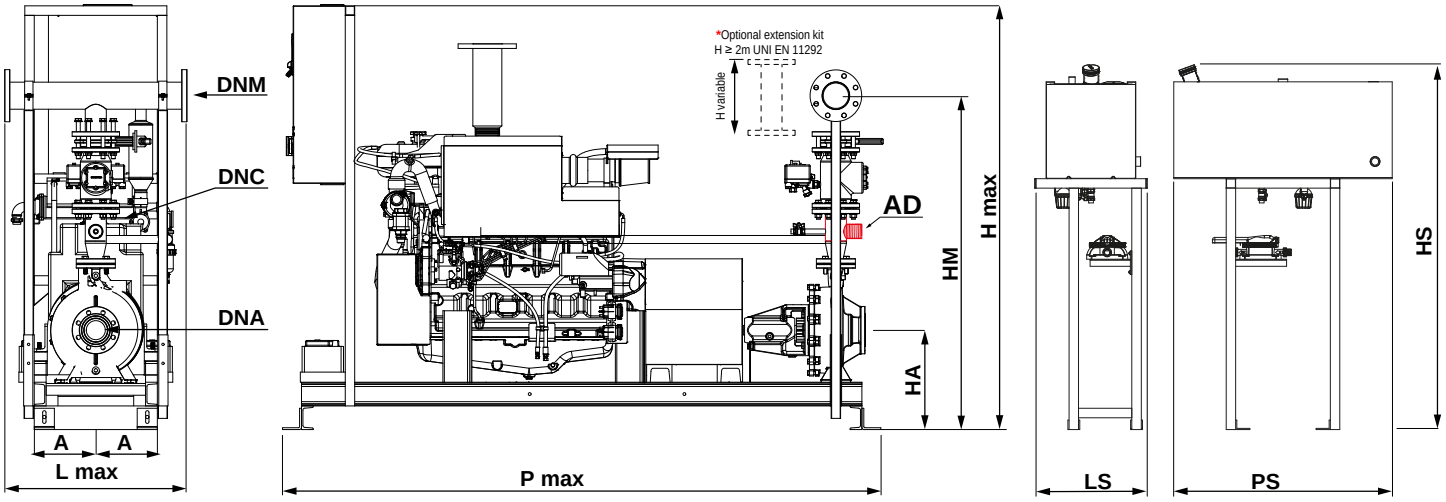

* H rise optional extension ≥ 2m

DIMENSIONS AND WEIGHTS OF EUROFIRE WITH MOTOR PUMPS 50-250

Jockey pumps on page 39

Q max	PRODUCT CODE 50-250					Power Pump	Heat exchange system	NID.	DNM	HA	HM		A	H max	L max	P max	Weight	Tank Diesel			
											SP	ST									
m³/h	COMP..	ID Pump	DNC		HYDRAULIC CONFIG.	kW Diesel		Ø	Ø	mm	mm	mm	mm	mm	mm	mm	kg	Litres	LS	PS	HS
≤ 70	GCOMO	240-242-243-250-255-260-267	065	D	/NS - /PS	25.2	Water/Water	65	80	420	1331*	1221*	305	1790	710	1860	587	50	586	850	1017
	GCOMO	265-266-270	065	D	/NS - /PS	36.5	Water/Water	65	80	420	1331*	1221*	325	1790	710	2090	642	80	585	850	1037
> 70	GCOMO	240-242-243-250-255-260-267	080	E	/NS - /PS	25.2	Water/Water	65	100	420	1355*	1245*	305	1790	770	1860	627	50	586	850	1017
	GCOMO	265-266-270	080	E	/NS - /PS	36.5	Water/Water	65	100	420	1355*	1245*	325	1790	770	2090	682	80	585	850	1037

Fire-fighting units catalogue - Edition: September-2021

EUROFIRE WITH MOTOR PUMP 50-315
UNI EN 12845

iPRO DIESEL

GSM

PERFORMANCE RANGE

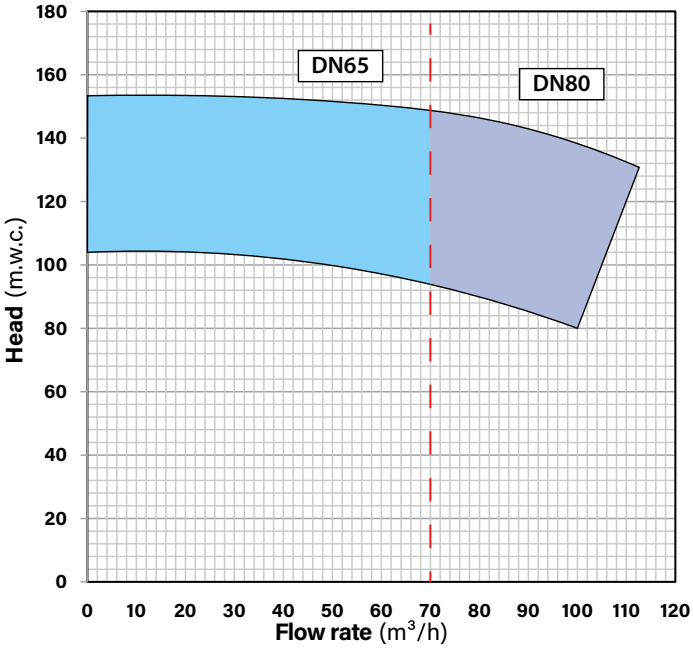

CENTRIFUGAL PUMP

END SUCTION normalised single-impeller centrifuge with **BACK PULL OUT** horizontal shaft, with a spiral diffuser and separate support; axial intake and radial delivery UNI EN 12845 10.1

- Pump body and impeller: EN GJL 250 cast iron
- Shaft: AISI 431 Stainless Steel
- Mechanical seal: Ceramic-Graphite

MOTOR

Top brand endothermic engine with direct air cooling system up to 26.5 kW and greater power outputs with a heat exchanger.
Power calculated based on the power absorbed at the point of the characteristic curve which corresponds to a **NPSH of 16 m UNI EN 12845:2020 10.1**
NA: continuous overloadable power 10% DIN 6271 - ISO 3046-1

HYDRAULIC PUMPS 50-315 EFFICIENCY

Electric Version page 66

Pump Model	Pump ID	Motor		Pump Fittings			Flow Rate - m³/h											
		Electrical	Diesel	Intake	Delivery													
		kW	kW	Ø	Ø		0	10	20	30	40	50	60	70	80	90	100	110
50-315/2	269	45	47.7	80	50	H (mwc)	104	103.5	103	102.5	101.5	100	97.5	94	90	85	80	
50-315/3	273	45	47.7	65	50		121	121	120.5	120	119	118	116	113	110	106	100	90
50-315/5	271	55	47.7	65	50		126	125.5	125	124.5	123.5	122	120.5	118	115	111	105	97.5
50-315/6	277	55	66	80	50		120	119.5	119	118	116	114	111	108	104	100	95.5	
50-315/7	272	55	66	65	50		136	136	135.5	135	134	133.5	132.5	130	127	123	118	112
50-315/8	275	75	66	80	50		131	131	130.5	130	129	127	124.5	121	117.5	113	108	
50-315/9	278	75	66	65	50		153	153	152.5	152	151.5	151	150	148	145	142	138	132

The values to the left of the reference refer to the maximum allowed delivery speed of 6 m/sec - The RED values entail speeds higher than 6 m/sec - The Values with GREY background indicate NPSH-R > 5m values.
For installations in HHS-HHP systems, contact our technical department. Nominal hydraulic characteristics of flow rate and head at the pump inlet, with performance tolerances according to UNI EN ISO 9906:2012 Grade 3B

EUROFIRE WITH MOTOR PUMP 50-315
UNI EN 12845

CENTRIFUGAL PUMP

COUPLING JOINT

Pump-motor connection via a cross cardan joint, complete with a safety guard UNI EN 12845 10.1 The cardan joint prevents the transmission of vibrations between the diesel engine and the pipes

KEY

NID	Nom. Intake Diameter
NDD	Nom. Delivery Diameter
NCD	Nom. Column Diameter
NS	Negative suction head set-up
PS	Positive suction head set-up
AD	Only found in the Negative suction head version **NS**

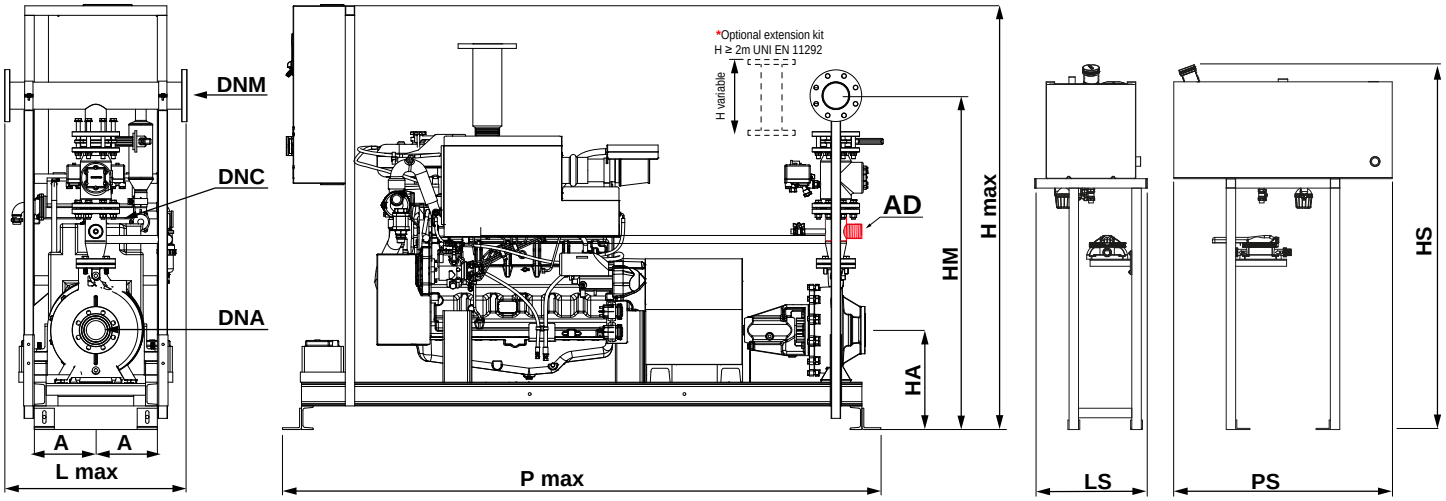

* H rise optional extension ≥ 2m

DIMENSIONS AND WEIGHTS OF EUROFIRE WITH MOTOR PUMPS 50-315

Jockey pumps on page 39

Q max	PRODUCT CODE 50-315					Power Pump	Heat exchange system	NID.	DNM	HA	HM		A	H max	L max	P max	Weight	Tank Diesel			
											SP	ST									
m³/h	COMP..	ID Pump	DNC		HYDRAULIC CONFIG.	kW Diesel		Ø	Ø	mm	mm	mm	mm	mm	mm	mm	kg	Litres	LS	PS	HS
≤ 70	GCOMO	269-271-273	065	D	/NS - /PS	47.7	Water/Water	65	80	420	1386*	1276*	325	1790	710	2090	690	80	585	850	1037
	GCOMO	272-275-277-278	065	D	/NS - /PS	66	Water/Water	65	80	420	1386*	1276*	325	1790	710	2290	762	125	486	920	1407
> 70	GCOMO	269-271-273	080	E	/NS - /PS	47.7	Water/Water	65	100	420	1410*	1300*	325	1790	770	2090	730	80	585	850	1037
	GCOMO	272-275-277-278	080	E	/NS - /PS	66	Water/Water	65	100	420	1410*	1300*	325	1790	770	2290	802	125	486	920	1407

Fire-fighting units catalogue - Edition: September-2021

EUROFIRE WITH MOTOR PUMP 65-200
UNI EN 12845

iPRO DIESEL

GSM

PERFORMANCE RANGE

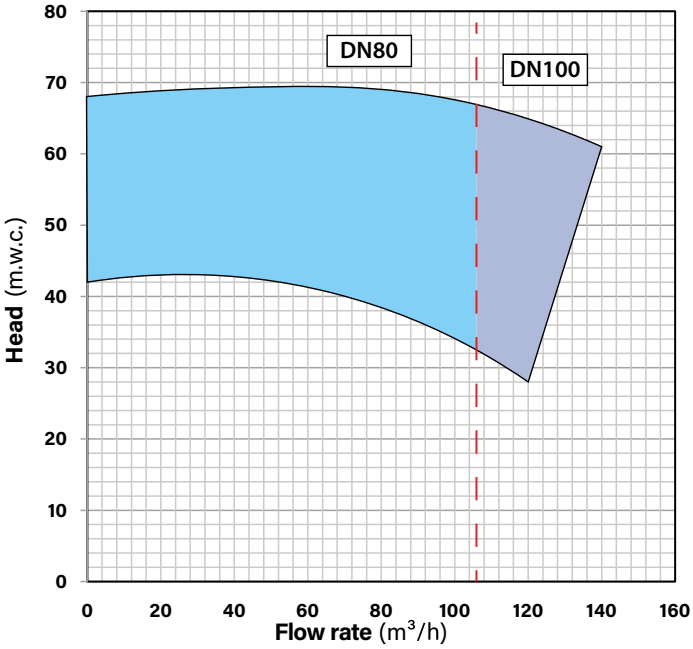

CENTRIFUGAL PUMP

END SUCTION normalised single-impeller centrifuge with **BACK PULL OUT** horizontal shaft, with a spiral diffuser and separate support; axial intake and radial delivery UNI EN 12845 10.1

- Pump body and impeller: EN GJL 250 cast iron
- Shaft: AISI 431 Stainless Steel
- Mechanical seal: Ceramic-Graphite

MOTOR

Top brand endothermic engine with direct air cooling system up to 26.5 kW and greater power outputs with a heat exchanger.
Power calculated based on the power absorbed at the point of the characteristic curve which corresponds to a **NPSH of 16 m UNI EN 12845:2020 10.1**
NA: continuous overloadable power 10% DIN 6271 - ISO 3046-1

HYDRAULIC PUMPS 65-200 EFFICIENCY

Electric Version page 68

Pump Model	Pump ID	Motor		Pump Fittings			Flow Rate - m³/h								
		Electrical	Diesel	Intake	Delivery										
		kW	kW	Ø	Ø		0	20	40	60	80	100	120	140	160
65-200/1	283	15	17.5	80	65	H (mwc)	42.5	42.5	42.5	41	38.5	34	28		
65-200/9	274	18.5	17.5	80	65		43	43.5	44	43.5	41				
65-200/10	280	22	25.2	80	65		49	49.5	50	49.5	48				
65-200/13	284	30	25.2	80	65		48	48	48	48	46	42	37.5	35.5	
65-200/11	290	30	25.2	80	65		62.5	63.5	64	64	61.5	57.5	51.5		
65-200/6	296	30	25.2	80	65		54.5	54	53.5	53	51	48.5	44.5		
65-200/8	295	30	36.5	80	65		60	59.5	59.5	59	57	54.5	51	47	
65-200/12	300	30	36.5	80	65		65	66	67	66.5	64	60.5	55.5		
65-200/5	285	37	36.5	80	65		68	68.5	69	69	68.5	67.5	65	61	

The values to the left of the reference refer to the maximum allowed delivery speed of 6 m/sec - The RED values entail speeds higher than 6 m/sec - The Values with GREY background indicate NPSH-R > 5m values.
For installations in HHS-HHP systems, contact our technical department. Nominal hydraulic characteristics of flow rate and head at the pump inlet, with performance tolerances according to UNI EN ISO 9906:2012 Grade 3B

EUROFIRE WITH MOTOR PUMP 65-200
UNI EN 12845

CENTRIFUGAL PUMP

COUPLING JOINT

Pump-motor connection via a cross cardan joint, complete with a safety guard UNI EN 12845 10.1 The cardan joint prevents the transmission of vibrations between the diesel engine and the pipes

KEY

NID	Nom. Intake Diameter
NDD	Nom. Delivery Diameter
NCD	Nom. Column Diameter
NS	Negative suction head set-up
PS	Positive suction head set-up
AD	Only found in the Negative suction head version **NS**

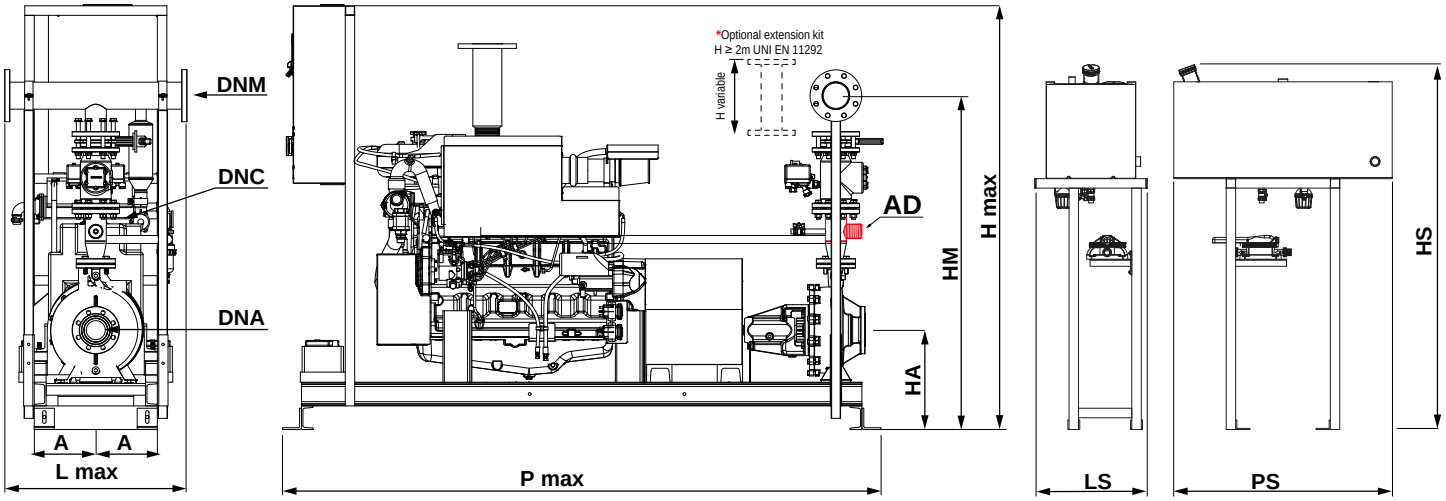

* H rise optional extension ≥ 2m

DIMENSIONS AND WEIGHTS OF EUROFIRE WITH MOTOR PUMPS 65-200

Jockey pumps on page 39

Q max	PRODUCT CODE 65-200					Power Pump	Heat exchange system	NID.	DNM	HA	HM		A	H max	L max	P max	Weight	Tank Diesel			
											SP	ST									
m³/h	COMP..	ID Pump	DNC		HYDRAULIC CONFIG.	kW Diesel		Ø	Ø	mm	mm	mm	mm	mm	mm	mm	kg	Litres	LS	PS	HS
≤ 105	GCOMO	274-283	080	E	/NS - /PS	17.5	Air	80	100	420	1354*	1245*	320	1790	770	1800	564	34	451	514	1180
	GCOMO	280-284-290-296	080	E	/NS - /PS	25.2	Water/Water	80	100	420	1354*	1245*	305	1790	770	1860	624	50	586	850	1017
	GCOMO	285-295-300	080	E	/NS - /PS	36.5	Water/Water	80	100	420	1354*	1245*	325	1790	770	2090	679	80	585	850	1037
> 105	GCOMO	274-283	100	F	/NS - /PS	17.5	Air	80	125	420	1486*	1343*	320	1790	870	1800	634	34	451	514	1180
	GCOMO	280-284-290-296	100	F	/NS - /PS	25.2	Water/Water	80	125	420	1486*	1343*	305	1790	870	1860	698	50	586	850	1017
	GCOMO	285-295-300	100	F	/NS - /PS	36.5	Water/Water	80	125	420	1486*	1343*	325	1790	870	2090	749	80	585	850	1037

Fire-fighting units catalogue - Edition: September-2021

EUROFIRE WITH MOTOR PUMP 65-250
UNI EN 12845

PERFORMANCE RANGE

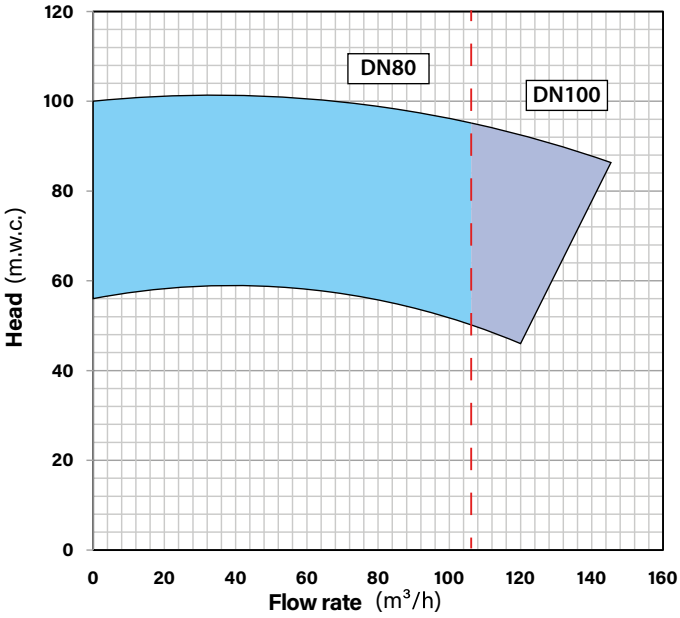

iPRO DIESEL

GSM

CENTRIFUGAL PUMP

END SUCTION normalised single-impeller centrifuge with **BACK PULL OUT** horizontal shaft, with a spiral diffuser and separate support; axial intake and radial delivery UNI EN 12845 10.1

- Pump body and impeller: EN GJL 250 cast iron
- Shaft: AISI 431 Stainless Steel
- Mechanical seal: Ceramic-Graphite

MOTOR

Top brand endothermic engine with direct air cooling system up to 26.5 kW and greater power outputs with a heat exchanger.
Power calculated based on the power absorbed at the point of the characteristic curve which corresponds to a **NPSH of 16 m UNI EN 12845:2020 10.1**
NA: continuous overloadable power 10% DIN 6271 - ISO 3046-1

HYDRAULIC PUMPS 65-250 EFFICIENCY

Electric Version page 70

Pump Model	Pump ID	Motor		Pump Fittings			Flow Rate - m³/h								
		Electrical	Diesel	Intake	Delivery										
		kW	kW	Ø	Ø		0	20	40	60	80	100	120	140	160
65-250/13	267	30	25.2	80	65	H (mwc)	57	59	60	58	56	52	46		
65-250/6	320	30	36.5	80	65		70	71	71.5	70	67	62.5			
65-250/12	325	37	36.5	80	65		73	74	73	72	70	66			
65-250/3	335	37	36.5	80	65		75	74.5	74.5	74	73	70	65	58.5	
65-250/7	330	37	36.5	80	65		82	82	81.5	80	77.5	73.5			
65-250/4	352	45	47.7	80	65		95	95	95	95	94	92.5	87	81	
65-250/8	340	45	47.7	80	65		92	92	92	91	88.5	85			
65-250/9	345	45	47.7	80	65		84	83.5	83	82	81	79	76	71	
65-250/10	350	55	47.7	80	65		95	95.5	96	94.5	92	83			
65-250/14	326	55	66	80	65		100	100	100	99.5	98	97	93	87.5	
65-250/11	348	55	66	80	65		98	99	99.5	98	95	91			

The values to the left of the reference refer to the maximum allowed delivery speed of 6 m/sec - The RED values entail speeds higher than 6 m/sec - The Values with GREY background indicate NPSH-R > 5m values.
For installations in HHS-HHP systems, contact our technical department. Nominal hydraulic characteristics of flow rate and head at the pump inlet, with performance tolerances according to UNI EN ISO 9906:2012 Grade 3B

EUROFIRE WITH MOTOR PUMP 65-250
UNI EN 12845

CENTRIFUGAL PUMP

COUPLING JOINT

Pump-motor connection via a cross cardan joint, complete with a safety guard UNI EN 12845 10.1 The cardan joint prevents the transmission of vibrations between the diesel engine and the pipes

KEY

NID	Nom. Intake Diameter
NDD	Nom. Delivery Diameter
NCD	Nom. Column Diameter
NS	Negative suction head set-up
PS	Positive suction head set-up
AD	Only found in the Negative suction head version **NS**

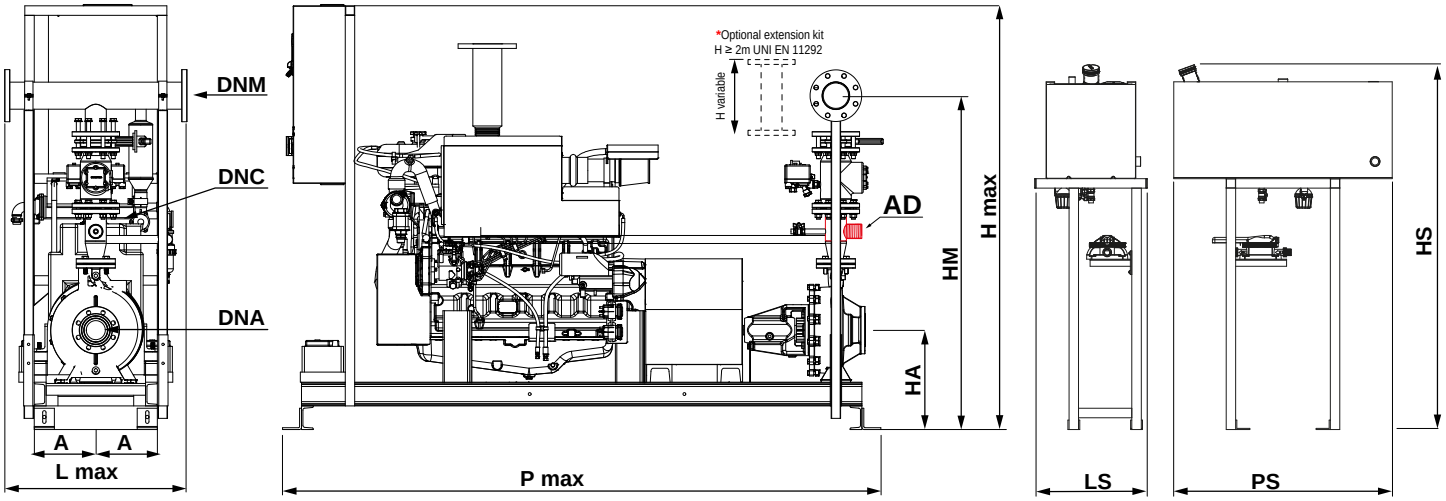

* H rise optional extension ≥ 2m

DIMENSIONS AND WEIGHTS OF EUROFIRE WITH MOTOR PUMPS 65-250

Jockey pumps on page 39

Q max	PRODUCT CODE 65-250					Power Pump	Heat exchange system	NID.	DNM	HA	HM		A	H max	L max	P max	Weight	Tank Diesel			
											SP	ST									
m³/h	COMP..	ID Pump	DNC		HYDRAULIC CONFIG.	kW Diesel		Ø	Ø	mm	mm	mm	mm	mm	mm	mm	kg	Litres	LS	PS	HS
≤ 105	GCOMO	267	080	E	/NS - /PS	25.2	Water/Water	80	100	420	1379*	1270*	340	1790	770	1980	706	80	585	850	1037
	GCOMO	320-325-330-335	080	E	/NS - /PS	36.5	Water/Water	80	100	420	1379*	1270*	325	1790	770	2190	706	80	585	850	1037
	GCOMO	340-345-350-352	080	E	/NS - /PS	47.7	Water/Water	80	100	420	1379*	1270*	325	1790	770	2140	721	80	585	850	1037
	GCOMO	326-348	080	E	/NS - /PS	66	Water/Water	80	100	420	1379*	1270*	325	1790	770	2290	793	125	486	920	1407
> 105	GCOMO	267	100	F	/NS - /PS	25.2	Water/Water	80	125	420	1511*	1368*	340	1790	870	1980	776	80	585	850	1037
	GCOMO	320-325-330-335	100	F	/NS - /PS	36.5	Water/Water	80	125	420	1511*	1368*	325	1790	870	2190	776	80	585	850	1037
	GCOMO	340-345-350-352	100	F	/NS - /PS	47.7	Water/Water	80	125	420	1511*	1368*	325	1790	870	2140	791	80	585	850	1037
	GCOMO	326-348	100	F	/NS - /PS	66	Water/Water	80	125	420	1511*	1368*	325	1790	870	2290	835	125	486	920	1407

Fire-fighting units catalogue - Edition: September-2021

EUROFIRE WITH MOTOR PUMP 65-315
UNI EN 12845

iPRO DIESEL

GSM

PERFORMANCE RANGE

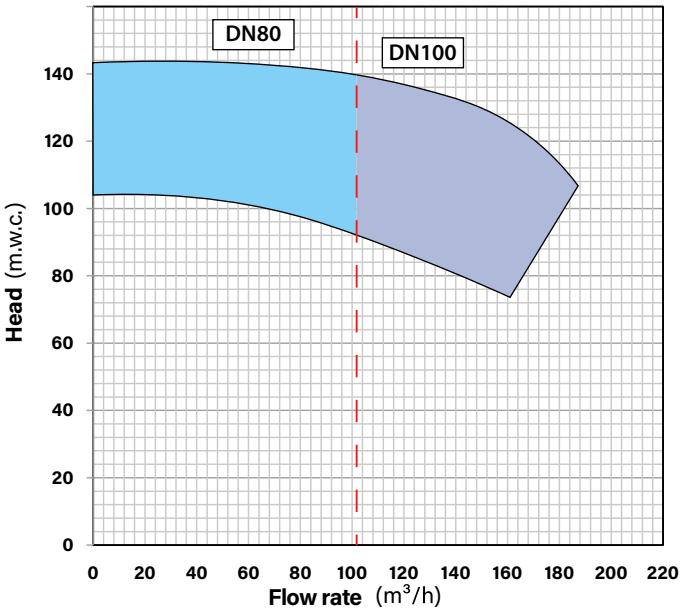

CENTRIFUGAL PUMP

END SUCTION normalised single-impeller centrifuge with **BACK PULL OUT** horizontal shaft, with a spiral diffuser and separate support; axial intake and radial delivery UNI EN 12845 10.1

- Pump body and impeller: EN GJL 250 cast iron
- Shaft: AISI 431 Stainless Steel
- Mechanical seal: Ceramic-Graphite

MOTOR

Top brand endothermic engine with direct air cooling system up to 26.5 kW and greater power outputs with a heat exchanger.
Power calculated based on the power absorbed at the point of the characteristic curve which corresponds to a **NPSH of 16 m UNI EN 12845:2020 10.1**
NA: continuous overloadable power 10% DIN 6271 - ISO 3046-1

HYDRAULIC PUMPS 65-315 EFFICIENCY

Electric Version page 72

Pump Model	Pump ID	Motor		Pump Fittings			Flow Rate - m³/h											
		Electrical	Diesel	Intake	Delivery													
		kW	kW	Ø	Ø		0	20	40	60	80	100	120	140	160	180	200	220
65-315/1	353	55	66	80	65	H (mwc)	105	104.5	104	103	101	98	93	85	74			
65-315/2	356	75	66	80	65		118	118	117	116	114	110	106	100	92			
65-315/3	354	90	102	80	65		143	143	142.5	142	141	140	136.5	132	126			
65-315/7	355	75	102	80	65		128	127.5	127	126	124	122	120	114	108	97	72	

The values to the left of the reference refer to the maximum allowed delivery speed of 6 m/sec - The RED values entail speeds higher than 6 m/sec - The Values with GREY background indicate NPSH-R > 5m values.
For installations in HHS-HHP systems, contact our technical department. Nominal hydraulic characteristics of flow rate and head at the pump inlet, with performance tolerances according to UNI EN ISO 9906:2012 Grade 3B

EUROFIRE WITH MOTOR PUMP 65-315
UNI EN 12845

CENTRIFUGAL PUMP

COUPLING JOINT

Pump-motor connection via a cross cardan joint, complete with a safety guard UNI EN 12845 10.1 The cardan joint prevents the transmission of vibrations between the diesel engine and the pipes

KEY

NID	Nom. Intake Diameter
NDD	Nom. Delivery Diameter
NCD	Nom. Column Diameter
NS	Negative suction head set-up
PS	Positive suction head set-up
AD	Only found in the Negative suction head version **NS**

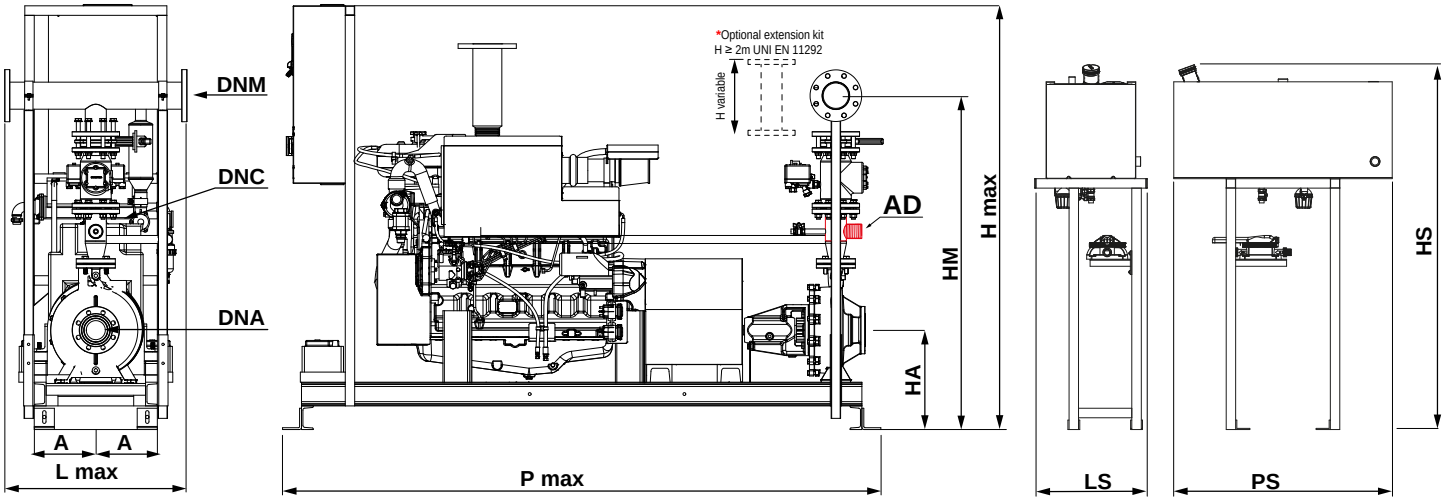

* H rise optional extension ≥ 2m

DIMENSIONS AND WEIGHTS OF EUROFIRE WITH MOTOR PUMPS 65-315

Jockey pumps on page 39

Q max	PRODUCT CODE 65-315					Power Pump	Heat exchange system	NID.	DNM	HA	HM		A	H max	L max	P max	Weight	Tank Diesel			
											SP	ST									
m³/h	COMP..	ID Pump	DNC		HYDRAULIC CONFIG.	kW Diesel		Ø	Ø	mm	mm	mm	mm	mm	mm	mm	kg	Litres	LS	PS	HS
≤ 105	GCOMO	353-356	080	E	/NS - /PS	66	Water/Water	80	100	470	1459*	1350*	325	1790	770	2295	808	125	486	920	1407
	GCOMO	354-355	080	E	/NS - /PS	94/102	Water/Water	80	100	470	1459*	1350*	325	1790	770	2625	942	200	785	849	1487
> 105	GCOMO	353-356	100	F	/NS - /PS	66	Water/Water	80	125	470	1591*	1448*	325	1790	870	2295	878	125	486	920	1407
	GCOMO	354-355	100	F	/NS - /PS	94/102	Water/Water	80	125	470	1591*	1448*	325	1790	870	2625	994	200	785	849	1487

Fire-fighting units catalogue - Edition: September-2021

EUROFIRE WITH MOTOR PUMP 80-200
UNI EN 12845

PERFORMANCE RANGE

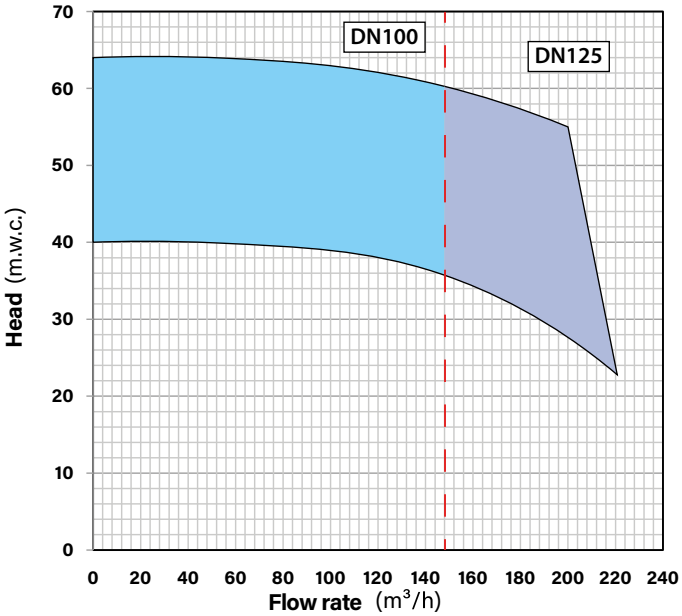

iPRO DIESEL

GSM

CENTRIFUGAL PUMP

END SUCTION normalised single-impeller centrifuge with **BACK PULL OUT** horizontal shaft, with a spiral diffuser and separate support; axial intake and radial delivery UNI EN 12845 10.1

- Pump body and impeller: EN GJL 250 cast iron
- Shaft: AISI 431 Stainless Steel
- Mechanical seal: Ceramic-Graphite

MOTOR

Top brand endothermic engine with direct air cooling system up to 26.5 kW and greater power outputs with a heat exchanger.
Power calculated based on the power absorbed at the point of the characteristic curve which corresponds to a **NPSH of 16 m UNI EN 12845:2020 10.1**
NA: continuous overloadable power 10% DIN 6271 - ISO 3046-1

HYDRAULIC PUMPS 80-200 EFFICIENCY

Electric Version page 74

Pump Model	Pump ID	Motor		Pump Fittings			Flow Rate - m³/h										
		Electrical	Diesel	Intake	Delivery												
		kW	kW	Ø	Ø		0	50	80	100	120	140	160	180	200	220	240
80-200/1	358	22	25.2	100	80	H (mwc)	40	40	39.5	39	38	36.5	34.5	31.5	27.5	23.5	
80-200/10	362	30	25.2	100	80		50	49	47.5	46.5	45	43	41	39	36	31.5	
80-200/3	357	30	36.5	100	80		51	51	50	49	48	47	45	42.5	39	35.5	
80-200/8	367	30	36.5	100	80		53	52.5	51	50	49	47	45	43	40		
80-200/6	360	37	36.5	100	80		57.5	57	56.5	55.5	54	52	50	48	45		
80-200/7	365	45	47.7	100	80		63	63.5	63	63	61.5	60	58	56	53.5		
80-200/9	370	45	47.7	100	80		64	63.5	63	62.5	62	60.5	59	57	55		

The values to the left of the reference refer to the maximum allowed delivery speed of 6 m/sec - The RED values entail speeds higher than 6 m/sec - The Values with GREY background indicate NPSH-R > 5m values.
For installations in HHS-HHP systems, contact our technical department. Nominal hydraulic characteristics of flow rate and head at the pump inlet, with performance tolerances according to UNI EN ISO 9906:2012 Grade 3B

EUROFIRE WITH MOTOR PUMP 80-200
UNI EN 12845

CENTRIFUGAL PUMP

COUPLING JOINT

Pump-motor connection via a cross cardan joint, complete with a safety guard UNI EN 12845 10.1 The cardan joint prevents the transmission of vibrations between the diesel engine and the pipes

KEY

NID	Nom. Intake Diameter
NDD	Nom. Delivery Diameter
NCD	Nom. Column Diameter
NS	Negative suction head set-up
PS	Positive suction head set-up
AD	Only found in the Negative suction head version **NS**

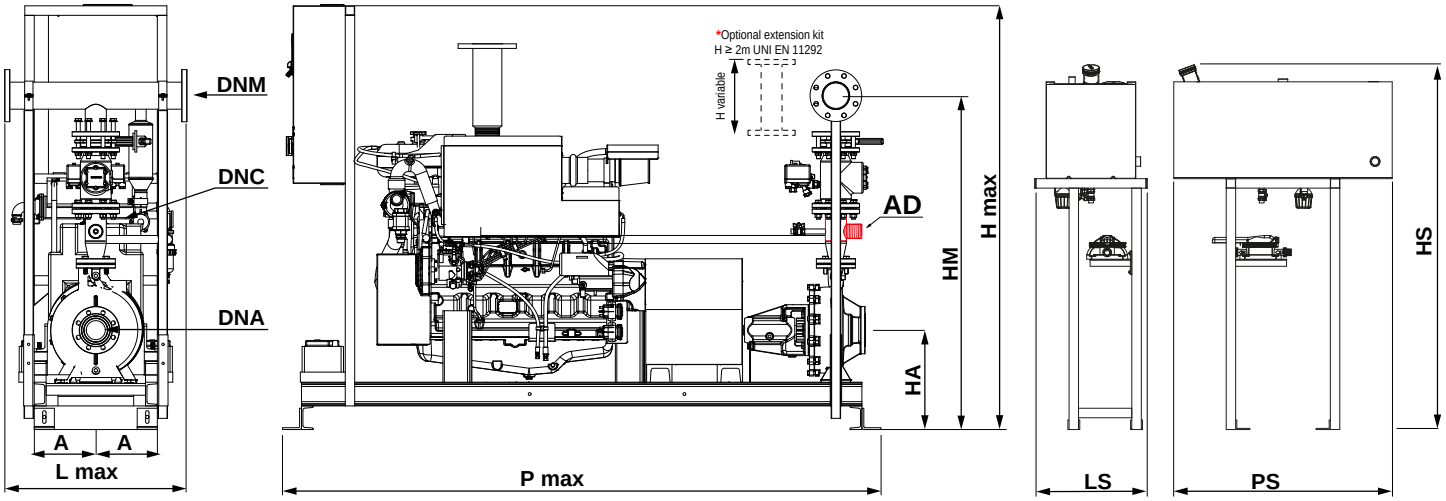

* H rise optional extension ≥ 2m

DIMENSIONS AND WEIGHTS OF EUROFIRE WITH MOTOR PUMPS 80-200

Jockey pumps on page 39

Q max	PRODUCT CODE 80-200					Power Pump	Heat exchange system	NID.	DNM	HA	HM		A	H max	L max	P max	Weight	Tank Diesel			
											SP	ST									
m³/h	COMP..	ID Pump	DNC		HYDRAULIC CONFIG.	kW Diesel		Ø	Ø	mm	mm	mm	mm	mm	mm	mm	kg	Litres	LS	PS	HS
≤ 150	GCOMO	358-362	100	F	/NS - /PS	25.2	Water/Water	100	125	420	1512*	1368*	345	1790	870	1980	714	50	586	850	1017
	GCOMO	357-360-367	100	F	/NS - /PS	36.5	Water/Water	100	125	420	1512*	1368*	325	1790	870	2190	769	80	585	850	1037
	GCOMO	365-370	100	F	/NS - /PS	47.7	Water/Water	100	125	420	1512*	1368*	325	1790	870	2140	784	80	585	850	1037
> 150	GCOMO	358-362	125	G	/NS - /PS	25.2	Water/Water	100	150	420	1617*	1472*	345	1790	970	1980	934	50	586	850	1017
	GCOMO	357-360-367	125	G	/NS - /PS	36.5	Water/Water	100	150	420	1617*	1472*	325	1790	970	2190	989	80	585	850	1037
	GCOMO	365-370	125	G	/NS - /PS	47.7	Water/Water	100	150	420	1617*	1472*	325	1790	970	2140	1004	80	585	850	1037

Fire-fighting units catalogue - Edition: September-2021

EUROFIRE WITH MOTOR PUMP 80-250
UNI EN 12845

PERFORMANCE RANGE

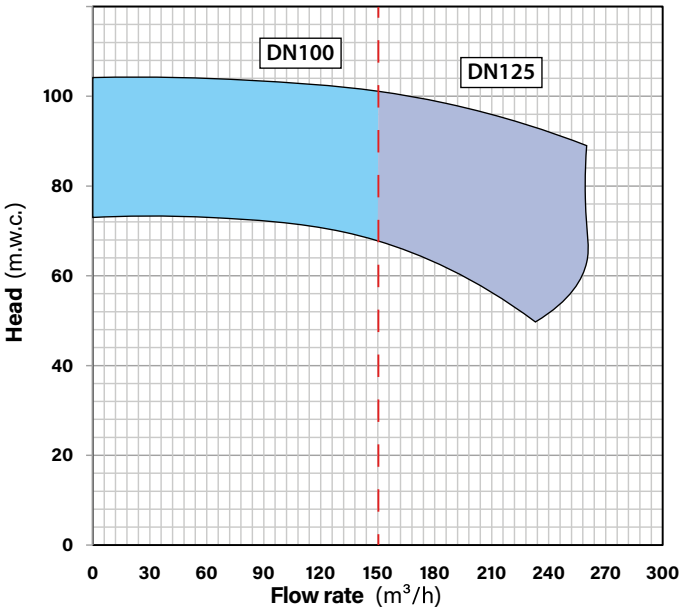

iPRO DIESEL

GSM

CENTRIFUGAL PUMP

END SUCTION normalised single-impeller centrifuge with **BACK PULL OUT** horizontal shaft, with a spiral diffuser and separate support; axial intake and radial delivery UNI EN 12845 10.1

- Pump body and impeller: EN GJL 250 cast iron
- Shaft: AISI 431 Stainless Steel
- Mechanical seal: Ceramic-Graphite

MOTOR

Top brand endothermic engine with direct air cooling system up to 26.5 kW and greater power outputs with a heat exchanger.
Power calculated based on the power absorbed at the point of the characteristic curve which corresponds to a **NPSH of 16 m UNI EN 12845:2020 10.1**
NA: continuous overloadable power 10% DIN 6271 - ISO 3046-1

HYDRAULIC PUMPS 80-250 EFFICIENCY

Electric Version page 76

Pump Model	Pump ID	Motor		Pump Fittings			Flow Rate - m³/h											
		Electrical	Diesel	Intake	Delivery													
		kW	kW	Ø	Ø		0	50	80	100	120	140	160	180	200	220	240	260
80-250/2	371	45	47.7	100	80	H (mwc)	76.5	77	76	75	73	71	68	64	60			
80-250/3	376	55	47.7	100	80		80	80	79	78.5	77	75	72	68	64			
80-250/10	372	55	47.7	100	80		73	73	72.5	72	71	69	66.5	63	59			
80-250/4	373	55	66	100	80		85	85	84	83	82	80	77	74	70			
80-250/11	380	55	66	100	80		80	79.5	78	77.5	76	75	73	70	66	61	52.5	
80-250/5	385	75	66	100	80		81.5	82	82	81	80	79	77.5	76	74	71	67	63
80-250/6	384	75	66	100	80		96	96	96	95	94	92	90	87	84	80		
80-250/12	392	75	66	100	80		89	88.5	87	86.5	85.5	84.5	83	80	77	73	68	
80-250/7	386	75	108	100	80		89	89	89	88.5	88	87	85.5	84	82	79.5	76.5	73
80-250/8	394	75	108	100	80		102	102	101	100.5	100	98.5	96	94	91	87		
80-250/9	396	90	108	100	80		104	104	103	102.5	102	101.5	100	99	97	95	92	89

The values to the left of the reference refer to the maximum allowed delivery speed of 6 m/sec - The RED values entail speeds higher than 6 m/sec - The Values with GREY background indicate NPSH-R > 5m values.
For installations in HHS-HHP systems, contact our technical department. Nominal hydraulic characteristics of flow rate and head at the pump inlet, with performance tolerances according to UNI EN ISO 9906:2012 Grade 3B

EUROFIRE WITH MOTOR PUMP 80-250
UNI EN 12845

CENTRIFUGAL PUMP

COUPLING JOINT

Pump-motor connection via a cross cardan joint, complete with a safety guard UNI EN 12845 10.1 The cardan joint prevents the transmission of vibrations between the diesel engine and the pipes

KEY

NID	Nom. Intake Diameter
NDD	Nom. Delivery Diameter
NCD	Nom. Column Diameter
NS	Negative suction head set-up
PS	Positive suction head set-up
AD	Only found in the Negative suction head version **NS**

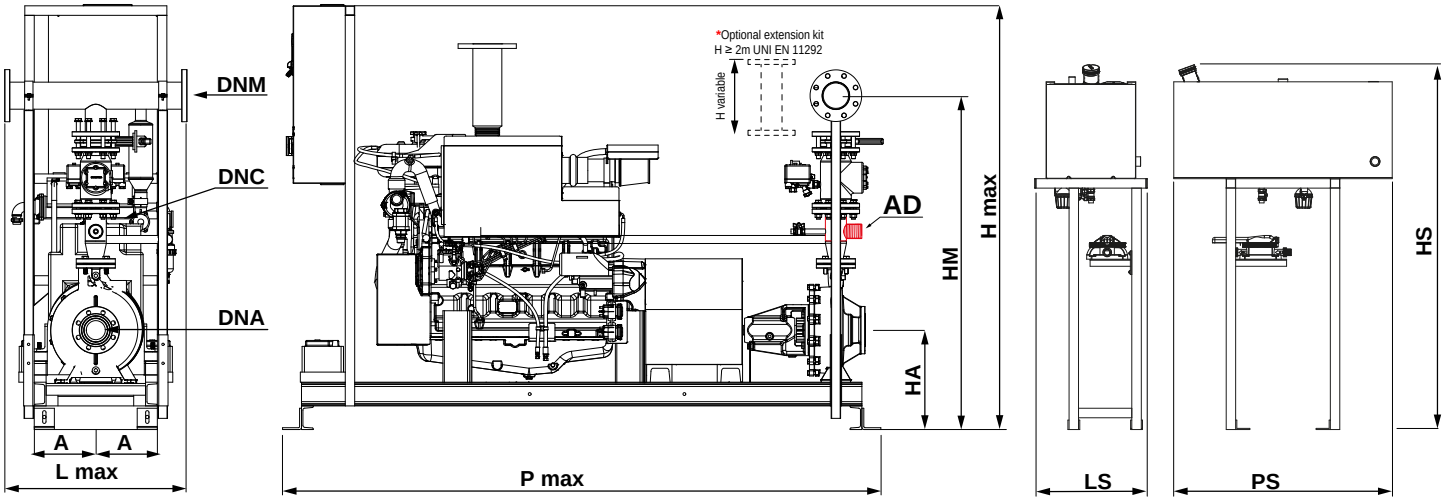

* H rise optional extension ≥ 2m

DIMENSIONS AND WEIGHTS OF EUROFIRE WITH MOTOR PUMPS 80-250

Jockey pumps on page 39

Q max	PRODUCT CODE 80-250					Power Pump	Heat exchange system	NID.	DNM	HA	HM		A	H max	L max	P max	Weight	Tank Diesel			
											SP	ST									
m³/h	COMP..	ID Pump	DNC		HYDRAULIC CONFIG.	kW Diesel		Ø	Ø	mm	mm	mm	mm	mm	mm	mm	kg	Litres	LS	PS	HS
≤ 150	GCOMO	371-372-376	100	F	/NS - /PS	47.7	Water/Water	100	125	420	1542*	1398*	325	1790	870	2140	796	80	585	850	1037
	GCOMO	373-380-384-385-392	100	F	/NS - /PS	66	Water/Water	100	125	470	1592*	1448*	325	1790	870	2295	868	125	486	920	1407
	GCOMO	386-394-396	100	F	/NS - /PS	108	Water/Water	100	125	555	1677*	1533*	460	1802	920	2460	1002	200	785	849	1487
> 150	GCOMO	371-372-376	125	G	/NS - /PS	47.7	Water/Water	100	150	420	1647*	1502*	325	1790	970	2140	1016	80	585	850	1037
	GCOMO	373-380-384-385-392	125	G	/NS - /PS	66	Water/Water	100	150	470	1697*	1552*	325	1839	970	2295	1088	125	486	920	1407
	GCOMO	386-394-396	125	G	/NS - /PS	108	Water/Water	100	150	555	1782*	1637*	460	1924	970	2460	1222	200	785	849	1487

Fire-fighting units catalogue - Edition: September-2021

EUROFIRE WITH MOTOR PUMP 80-315
UNI EN 12845

iPRO DIESEL

GSM

PERFORMANCE RANGE

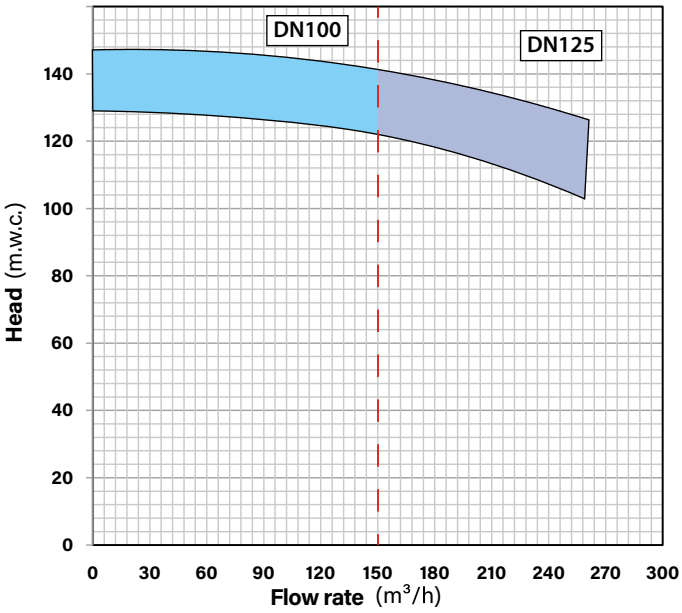

CENTRIFUGAL PUMP

END SUCTION normalised single-impeller centrifuge with **BACK PULL OUT** horizontal shaft, with a spiral diffuser and separate support; axial intake and radial delivery UNI EN 12845 10.1

- Pump body and impeller: EN GJL 250 cast iron
- Shaft: AISI 431 Stainless Steel
- Mechanical seal: Ceramic-Graphite

MOTOR

Top brand endothermic engine with direct air cooling system up to 26.5 kW and greater power outputs with a heat exchanger.
Power calculated based on the power absorbed at the point of the characteristic curve which corresponds to a **NPSH of 16 m UNI EN 12845:2020 10.1**
NA: continuous overloadable power 10% DIN 6271 - ISO 3046-1

HYDRAULIC PUMPS 80-315 EFFICIENCY

Electric Version page 78

Pump Model	Pump ID	Motor		Pump Fittings			Flow Rate - m³/h											
		Electrical	Diesel	Intake	Delivery													
		kW	kW	Ø	Ø		0	50	80	100	120	140	160	180	200	220	240	260
80-315/3	403	110	108	100	80	H (mwc)	129	128	127	126	125	123	121	118	115	111	107	103
80-315/4	406	132	149	100	80		147	146.5	145.5	145	143.5	142	140	137.5	135	132	129.5	126

The values to the left of the reference refer to the maximum allowed delivery speed of 6 m/sec - The RED values entail speeds higher than 6 m/sec - The Values with GREY background indicate NPSH-R > 5m values.
For installations in HHS-HHP systems, contact our technical department. Nominal hydraulic characteristics of flow rate and head at the pump inlet, with performance tolerances according to UNI EN ISO 9906:2012 Grade 3B

EUROFIRE WITH MOTOR PUMP 80-315
UNI EN 12845

CENTRIFUGAL PUMP

COUPLING JOINT

Pump-motor connection via a cross cardan joint, complete with a safety guard UNI EN 12845 10.1 The cardan joint prevents the transmission of vibrations between the diesel engine and the pipes

KEY

NID	Nom. Intake Diameter
NDD	Nom. Delivery Diameter
NCD	Nom. Column Diameter
NS	Negative suction head set-up
PS	Positive suction head set-up
AD	Only found in the Negative suction head version **NS**

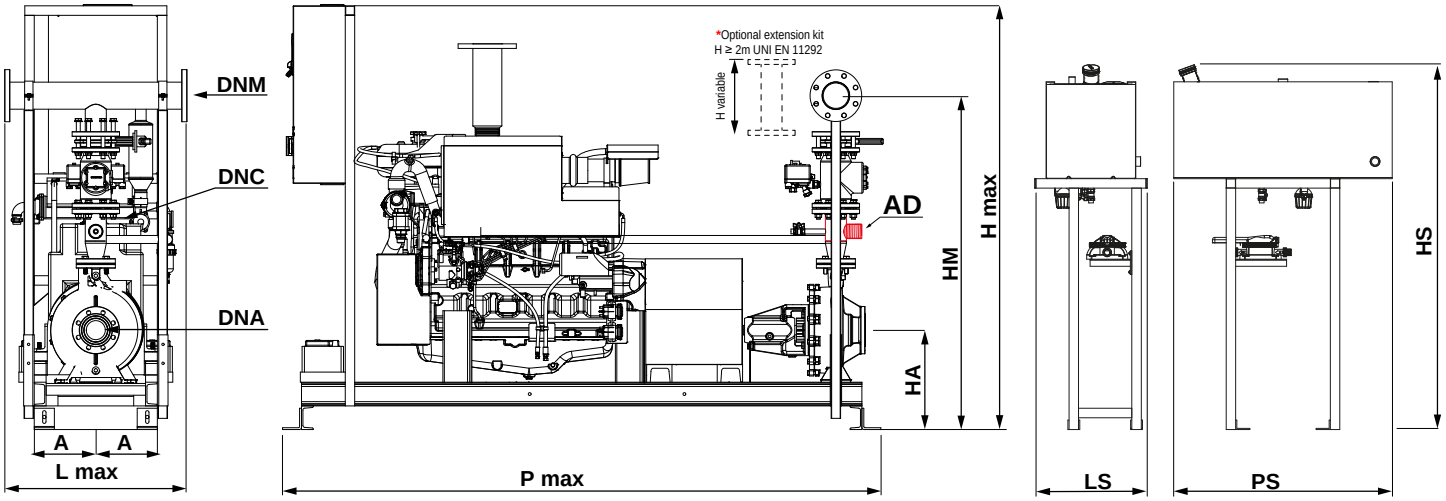

* H rise optional extension ≥ 2m

DIMENSIONS AND WEIGHTS OF EUROFIRE WITH MOTOR PUMPS 80-315

Jockey pumps on page 39

Q max	PRODUCT CODE 80-315					Power Pump	Heat exchange system	NID.	DNM	HA	HM		A	H max	L max	P max	Weight	Tank Diesel			
											SP	ST									
m³/h	COMP..	ID Pump	DNC		HYDRAULIC CONFIG.	kW Diesel		Ø	Ø	mm	mm	mm	mm	mm	mm	mm	kg	Litres	LS	PS	HS
≤ 150	GCOMO	403	100	F	/NS - /PS	108	Water/Water	100	125	580	1737*	1593*	460	1862	920	2460	1024	350	585	850	1037
	GCOMO	406	100	F	/NS - /PS	149	Water/Water	100	125	620	1777*	1633*	460	1902	920	2710	1382	350	785	849	1487
> 150	GCOMO	403	125	G	/NS - /PS	108	Water/Water	100	150	580	1842*	1697*	460	1985	970	2460	1244	350	585	850	1037
	GCOMO	406	125	G	/NS - /PS	149	Water/Water	100	150	620	1882*	1737*	460	2025	970	2710	1602	350	785	849	1487

Fire-fighting units catalogue - Edition: September-2021

EUROFIRE WITH MOTOR PUMP 100-200
UNI EN 12845

iPRO DIESEL

GSM

PERFORMANCE RANGE

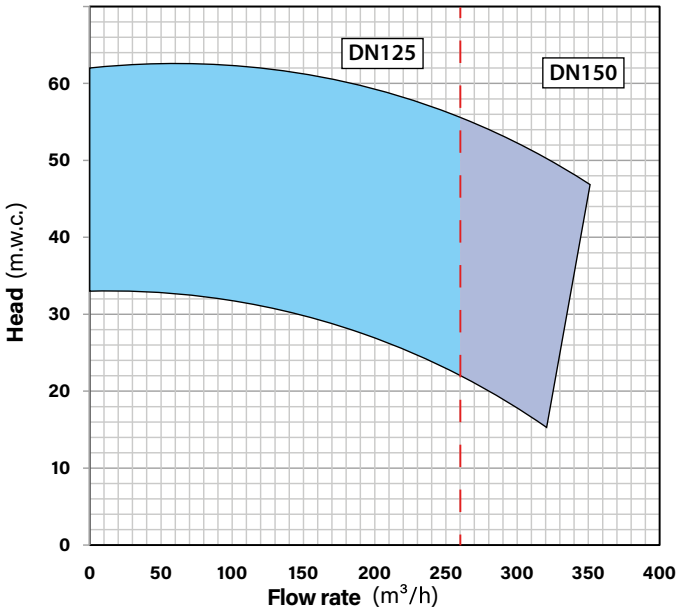

CENTRIFUGAL PUMP

END SUCTION normalised single-impeller centrifuge with **BACK PULL OUT** horizontal shaft, with a spiral diffuser and separate support; axial intake and radial delivery UNI EN 12845 10.1

- Pump body and impeller: EN GJL 250 cast iron
- Shaft: AISI 431 Stainless Steel
- Mechanical seal: Ceramic-Graphite

MOTOR

Top brand endothermic engine with direct air cooling system up to 26.5 kW and greater power outputs with a heat exchanger.
Power calculated based on the power absorbed at the point of the characteristic curve which corresponds to a **NPSH of 16 m UNI EN 12845:2020 10.1**
NA: continuous overloadable power 10% DIN 6271 - ISO 3046-1

HYDRAULIC PUMPS 100-200 EFFICIENCY

Electric Version page 80

Pump Model	Pump ID	Motor		Pump Fittings			Flow Rate - m³/h											
		Electrical	Diesel	Intake	Delivery													
		kW	kW	Ø	Ø		0	50	100	150	200	220	240	260	280	320	350	380
100-200/1	410	22	25.2	125	100	H (mwc)	33	33	32.5	30.5	27	25.5	24	22	20	15.5		
100-200/3	420	30	36.5	125	100		41	41	40	38	34.5	33	31.5	30	28	23		
100-200/5	430	37	36.5	125	100		47	47	47	45	42.5	41	39.5	37.5	35	29.5		
100-200/6	435	45	47.7	125	100		53	53	52.5	51	49	48.5	47	45.5	44	39.5	33	
100-200/8	440	55	66	125	100		62	62	62	61	59	58	57	55.5	54	51	47	

The values to the left of the reference refer to the maximum allowed delivery speed of 6 m/sec - The RED values entail speeds higher than 6 m/sec - The Values with GREY background indicate NPSH-R > 5m values.
For installations in HHS-HHP systems, contact our technical department. Nominal hydraulic characteristics of flow rate and head at the pump inlet, with performance tolerances according to UNI EN ISO 9906:2012 Grade 3B

EUROFIRE WITH MOTOR PUMP 100-200
UNI EN 12845

CENTRIFUGAL PUMP

COUPLING JOINT

Pump-motor connection via a cross cardan joint, complete with a safety guard UNI EN 12845 10.1 The cardan joint prevents the transmission of vibrations between the diesel engine and the pipes

KEY

NID	Nom. Intake Diameter
NDD	Nom. Delivery Diameter
NCD	Nom. Column Diameter
NS	Negative suction head set-up
PS	Positive suction head set-up
AD	Only found in the Negative suction head version **NS**

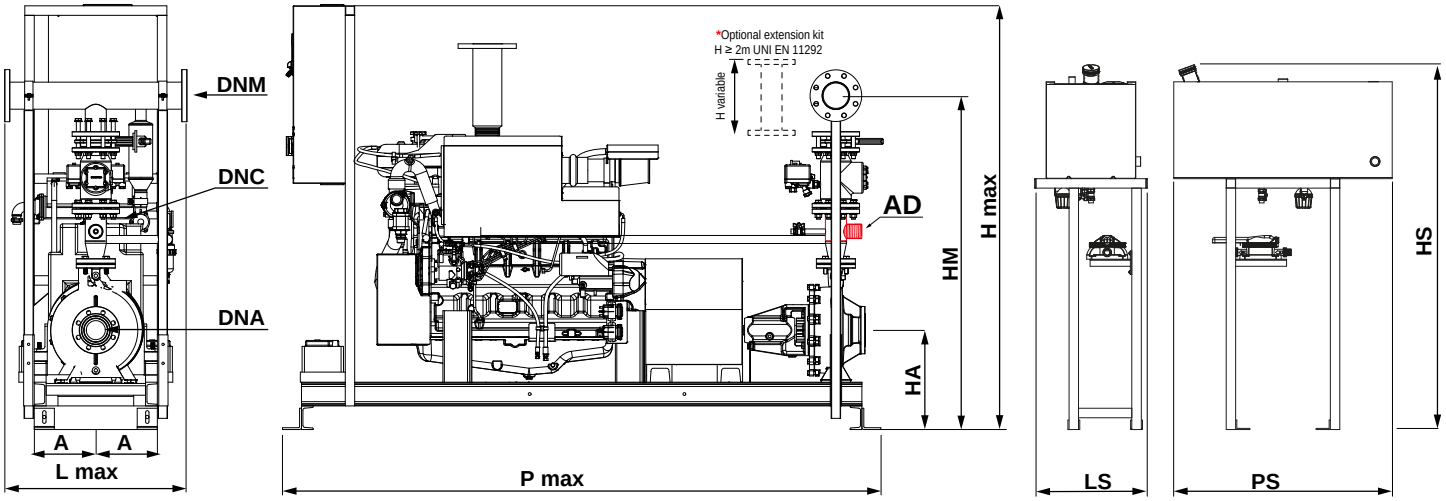

* H rise optional extension ≥ 2m

DIMENSIONS AND WEIGHTS OF EUROFIRE WITH MOTOR PUMPS 100-200

Jockey pumps on page 39

Q max	PRODUCT CODE 100-200					Power Pump	Heat exchange system	NID.	DNM	HA	HM		A	H max	L max	P max	Weight	Tank Diesel			
											SP	ST									
m³/h	COMP..	ID Pump	DNC		HYDRAULIC CONFIG.	kW Diesel		Ø	Ø	mm	mm	mm	mm	mm	mm	mm	kg	Litres	LS	PS	HS
≤ 260	GCOMO	410	125	G	/NS - /PS	25.2	Water/Water	125	150	420	1663*	1501*	340	1806	970	1980	944	50	586	850	1017
	GCOMO	420-430	125	G	/NS - /PS	36.5	Water/Water	125	150	420	1663*	1501*	325	1806	970	2190	999	80	585	850	1037
	GCOMO	435	125	G	/NS - /PS	47.7	Water/Water	125	150	420	1663*	1501*	325	1806	970	2140	1014	80	585	850	1037
	GCOMO	440	125	G	/NS - /PS	66	Water/Water	125	150	420	1663*	1501*	325	1806	970	2290	1086	125	486	920	1407
> 260	GCOMO	410	150	H	/NS - /PS	25.2	Water/Water	125	200	420	1786*	1634*	340	1906	1070	1980	1030	50	586	850	1017
	GCOMO	420-430	150	H	/NS - /PS	36.5	Water/Water	125	200	420	1786*	1634*	325	1906	1070	2190	1122	80	585	850	1037
	GCOMO	435	150	H	/NS - /PS	47.7	Water/Water	125	200	420	1786*	1634*	325	1906	1070	2140	1184	80	585	850	1037
	GCOMO	440	150	H	/NS - /PS	66	Water/Water	125	200	420	1786*	1634*	325	1906	1070	2290	1203	125	486	920	1407

Fire-fighting units catalogue - Edition: September-2021

EUROFIRE WITH MOTOR PUMP 100-250
UNI EN 12845

PERFORMANCE RANGE

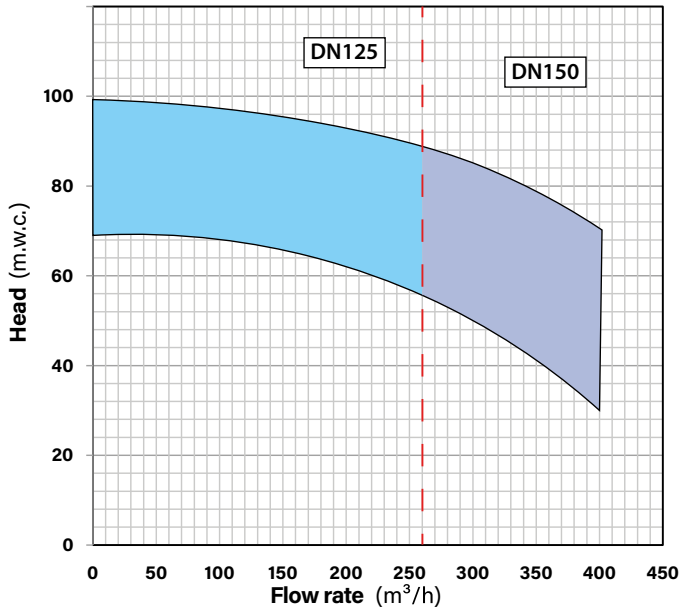

iPRO DIESEL

GSM

CENTRIFUGAL PUMP

END SUCTION normalised single-impeller centrifuge with **BACK PULL OUT** horizontal shaft, with a spiral diffuser and separate support; axial intake and radial delivery UNI EN 12845 10.1

- Pump body and impeller: EN GJL 250 cast iron
- Shaft: AISI 431 Stainless Steel
- Mechanical seal: Ceramic-Graphite

MOTOR

Top brand endothermic engine with direct air cooling system up to 26.5 kW and greater power outputs with a heat exchanger.
Power calculated based on the power absorbed at the point of the characteristic curve which corresponds to a **NPSH of 16 m UNI EN 12845:2020 10.1**
NA: continuous overloadable power 10% DIN 6271 - ISO 3046-1

HYDRAULIC PUMPS 100-250 EFFICIENCY

Electric Version page 82

Pump Model	Pump ID	Motor		Pump Fittings			Flow Rate - m³/h											
		Electrical	Diesel	Intake	Delivery													
		kW	kW	Ø	Ø		0	50	100	150	200	220	240	260	280	320	360	400
100-250/3	450	55	66	125	100	H (mwc)	69	69	67.5	65.5	62.5	61	59	56	53	47	40	30
100-250/5	460	75	66	125	100		75	75	74	72.5	69.5	67.5	65	62.5	60	54	47	39
100-250/7	471	75	108	125	100		80	80	79	77	74.5	73	70.5	68.5	66	60.5	53	46
100-250/9	476	90	108	125	100		89.5	89	87	85	82.5	81	79.5	77.5	75	69.5	63.5	56
100-250/11	481	110	108	125	100		95	94.5	93	90.5	88	86.5	85	83.5	81.5	77.5	72	63
100-250/14	479	110	108	125	100		99	98.5	97	95.5	93	92	90.5	89	87	83	77.5	70

The values to the left of the reference refer to the maximum allowed delivery speed of 6 m/sec - The RED values entail speeds higher than 6 m/sec - The Values with GREY background indicate NPSH-R > 5m values.
For installations in HHS-HHP systems, contact our technical department. Nominal hydraulic characteristics of flow rate and head at the pump inlet, with performance tolerances according to UNI EN ISO 9906:2012 Grade 3B

EUROFIRE WITH MOTOR PUMP 100-250
UNI EN 12845

CENTRIFUGAL PUMP

COUPLING JOINT

Pump-motor connection via a cross cardan joint, complete with a safety guard UNI EN 12845 10.1 The cardan joint prevents the transmission of vibrations between the diesel engine and the pipes

KEY

NID	Nom. Intake Diameter
NDD	Nom. Delivery Diameter
NCD	Nom. Column Diameter
NS	Negative suction head set-up
PS	Positive suction head set-up
AD	Only found in the Negative suction head version **NS**

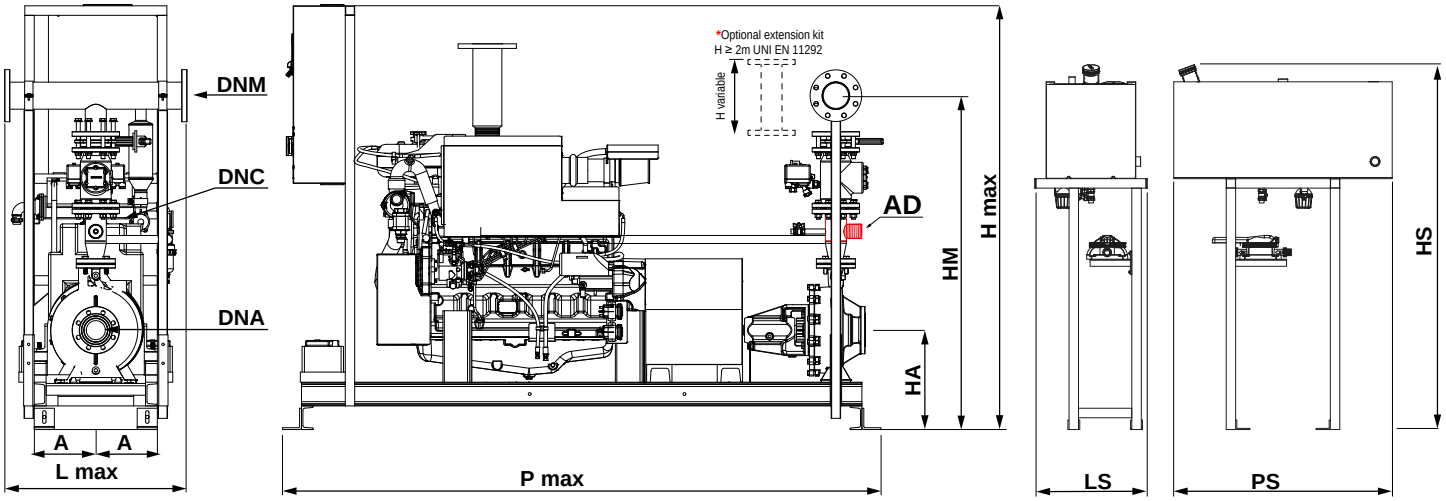

* H rise optional extension ≥ 2m

DIMENSIONS AND WEIGHTS OF EUROFIRE WITH MOTOR PUMPS 100-250

Jockey pumps on page 39

Q max	PRODUCT CODE 100-250					Power Pump	Heat exchange system	NID.	DNM	HA	HM		A	H max	L max	P max	Weight	Tank Diesel			
											SP	ST									
m³/h	COMP..	ID Pump	DNC		HYDRAULIC CONFIG.	kW Diesel		Ø	Ø	mm	mm	mm	mm	mm	mm	mm	kg	Litres	LS	PS	HS
≤ 260	GCOMO	450-460	125	G	/NS - /PS	66	Water/Water	125	150	470	1713*	1551*	325	1856	970	2295	1100	125	486	920	1407
	GCOMO	471-476-481-479	125	G	/NS - /PS	108	Water/Water	125	150	555	1798*	1636*	460	1941	970	2460	1238	350	820	950	1837
> 260	GCOMO	450-460-465	150	H	/NS - /PS	66	Water/Water	125	200	470	1786*	1634*	325	1956	1070	2295	1160	125	486	920	1407
	GCOMO	471-476-481-479	150	H	/NS - /PS	108	Water/Water	125	200	555	1871*	1719*	460	2041	1070	2460	1298	350	820	950	1837

Fire-fighting units catalogue - Edition: September-2021

EUROFIRE WITH MOTOR PUMP 100-315
UNI EN 12845

PERFORMANCE RANGE

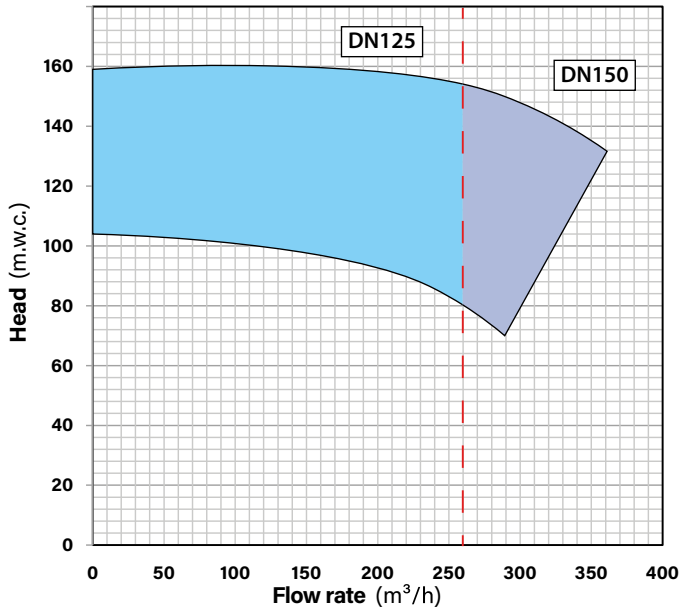

iPRO DIESEL

GSM

CENTRIFUGAL PUMP

END SUCTION normalised single-impeller centrifuge with **BACK PULL OUT** horizontal shaft, with a spiral diffuser and separate support; axial intake and radial delivery UNI EN 12845 10.1

- Pump body and impeller: EN GJL 250 cast iron
- Shaft: AISI 431 Stainless Steel
- Mechanical seal: Ceramic-Graphite

MOTOR

Top brand endothermic engine with direct air cooling system up to 26.5 kW and greater power outputs with a heat exchanger.
Power calculated based on the power absorbed at the point of the characteristic curve which corresponds to a **NPSH of 16 m UNI EN 12845:2020 10.1**
NA: continuous overloadable power 10% DIN 6271 - ISO 3046-1

HYDRAULIC PUMPS 100-315 EFFICIENCY

Electric Version page 84

Pump Model	Pump ID	Motor		Pump Fittings			Flow Rate - m³/h											
		Electrical	Diesel	Intake	Delivery													
		kW	kW	Ø	Ø		0	50	100	150	200	220	240	260	280	320	340	360
100-315/1	513	90	108	125	100	H (mwc)	104	103	101	99	94	90	86	81	74			
100-315/11	491	110	108	125	100		114	114	113.5	111	105.5	102	97	91	82.5			
100-315/2	492	110	108	125	100		116	115.5	114.5	112.5	108.5	106	103	99	94	79		
100-315/4	482	132	149	125	100		131	130.5	130	128.5	125.5	123.5	121	118	112.5	100	93	
100-315/6	486	160	149	125	100		138.5	138	137	136	134	132.5	130.5	128	124.5	113	105	
100-315/8	483	160	177	125	100		146	145.5	145	144	142.5	141.5	140	137	133	122	115	
100-315/9	488	200	202	125	100		152	152	150	148	145	143	141	139	137	132	129	
100-315/10	484	200	202	125	100		159	159	159	159	158.5	157	156	154	151	144	138	132

The values to the left of the reference refer to the maximum allowed delivery speed of 6 m/sec - The RED values entail speeds higher than 6 m/sec - The Values with GREY background indicate NPSH-R > 5m values.
For installations in HHS-HHP systems, contact our technical department. Nominal hydraulic characteristics of flow rate and head at the pump inlet, with performance tolerances according to UNI EN ISO 9906:2012 Grade 3B

EUROFIRE WITH MOTOR PUMP 100-315
UNI EN 12845

CENTRIFUGAL PUMP

COUPLING JOINT

Pump-motor connection via a cross cardan joint, complete with a safety guard UNI EN 12845 10.1 The cardan joint prevents the transmission of vibrations between the diesel engine and the pipes

KEY

NID	Nom. Intake Diameter
NDD	Nom. Delivery Diameter
NCD	Nom. Column Diameter
NS	Negative suction head set-up
PS	Positive suction head set-up
AD	Only found in the Negative suction head version **NS**

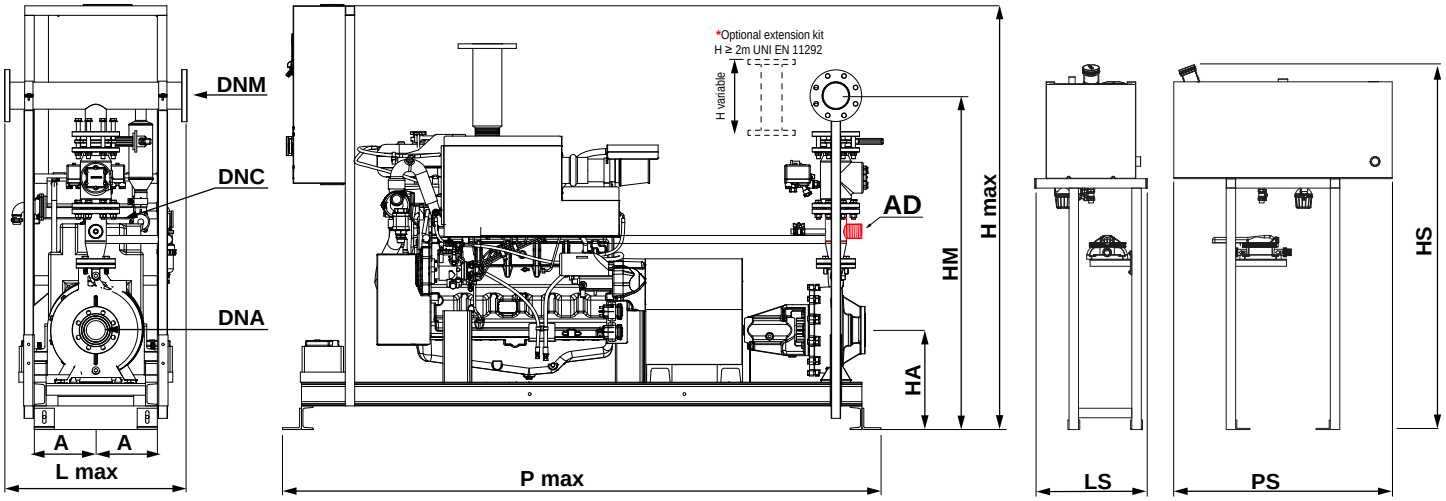

* H rise optional extension ≥ 2m

DIMENSIONS AND WEIGHTS OF EUROFIRE WITH MOTOR PUMPS 100-315

Jockey pumps on page 39

Q max	PRODUCT CODE 100-315					Power Pump	Heat exchange system	NID.	DNM	HA	HM		A	H max	L max	P max	Weight	Tank Diesel			
											SP	ST									
m³/h	COMP..	ID Pump	DNC		HYDRAULIC CONFIG.	kW Diesel		Ø	Ø	mm	mm	mm	mm	mm	mm	mm	kg	Litres	LS	PS	HS
≤ 260	GCOMO	491-492-513	125	G	/NS - /PS	108	Water/Water	125	150	580	1858*	1696*	460	2001	970	2460	1252	200	820	950	1837
	GCOMO	482-486	125	G	/NS - /PS	149	Water/Water	125	150	620	1898	1736*	460	2041	970	2710	1610	350	820	950	1837
	GCOMO	483	125	G	/NS - /PS	177	Water/Water	125	150	580	1858*	1696*	430	2001	970	2860	1742	350	820	950	1837
	GCOMO	484-488	125	G	/NS - /PS	202	Water/Water	125	150	620	1898	1736*	460	2041	970	2710	1850	350	820	950	1837
> 260	GCOMO	491-492-513	150	H	/NS - /PS	108	Water/Water	125	200	580	1931	1779*	460	2101	1070	2460	1312	200	820	950	1837
	GCOMO	482-486	150	H	/NS - /PS	149	Water/Water	125	200	620	1971	1819*	460	2141	1070	2710	1670	350	820	950	1837
	GCOMO	483	150	H	/NS - /PS	177	Water/Water	125	200	580	1931	1779*	430	2101	1070	2860	1802	350	820	950	1837
	GCOMO	484-488	150	H	/NS - /PS	202	Water/Water	125	200	620	1971	1819*	460	2141	1070	2710	1962	350	820	950	1837

Fire-fighting units catalogue - Edition: September-2021

EUROFIRE WITH MOTOR PUMP 125-250
UNI EN 12845

PERFORMANCE RANGE

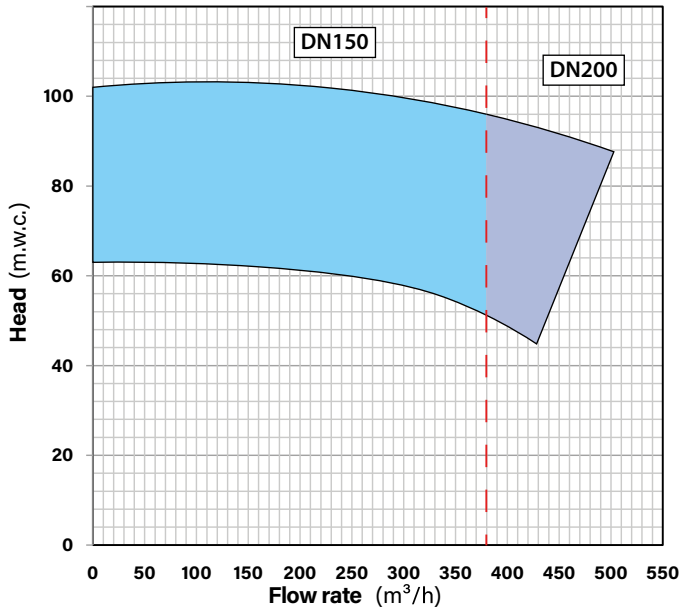

iPRO DIESEL

GSM

CENTRIFUGAL PUMP

END SUCTION normalised single-impeller centrifuge with **BACK PULL OUT** horizontal shaft, with a spiral diffuser and separate support; axial intake and radial delivery UNI EN 12845 10.1

- Pump body and impeller: EN GJL 250 cast iron
- Shaft: AISI 431 Stainless Steel
- Mechanical seal: Ceramic-Graphite

MOTOR

Top brand endothermic engine with direct air cooling system up to 26.5 kW and greater power outputs with a heat exchanger.
Power calculated based on the power absorbed at the point of the characteristic curve which corresponds to a **NPSH of 16 m UNI EN 12845:2020 10.1**
NA: continuous overloadable power 10% DIN 6271 - ISO 3046-1

HYDRAULIC PUMPS 125-250 EFFICIENCY

Electric Version page 86

Pump Model	Pump ID	Motor		Pump Fittings			Flow Rate - m³/h											
		Electrical	Diesel	Intake	Delivery													
		kW	kW	Ø	Ø		0	100	200	240	280	320	340	360	380	400	440	480
125-250/1	485	75	108	150	125	H (mwc)	63	63	62.5	61.5	60	57.5	55.5	53.5	51	48.5		
125-250/2	502	90	108	150	125		74	74	74	73.5	71	68	66.5	65	63	61	57	
125-250/12	501	90	108	150	125		71.5	71	69	68.5	67	65	64	63	62	60	57	55
125-250/3	503	110	108	150	125		80	80	79.5	78.5	77	74.5	73	72	70	68	64	
125-250/5	515	132	149	150	125		91	91	90.5	89.5	88	86.5	85	84	82.5	81	77	72.5
125-250/7	510	132	149	150	125		84	84	83	82	81	80	79	78.5	77.5	76.5		
125-250/13	516	160	149	150	125		88	90	92	92	91.5	91	90.5	90	89	88	86	85
125-250/8	520	160	149	150	125		98	98	98	97.8	97.5	97	96.5	96	95.5	95	88	87
125-250/6	525	160	149	150	125		102	102	102	101.5	100	98.5	98	97	96	95	92	

The values to the left of the reference refer to the maximum allowed delivery speed of 6 m/sec - The RED values entail speeds higher than 6 m/sec - The Values with GREY background indicate NPSH-R > 5m values.
For installations in HHS-HHP systems, contact our technical department. Nominal hydraulic characteristics of flow rate and head at the pump inlet, with performance tolerances according to UNI EN ISO 9906:2012 Grade 3B

EUROFIRE WITH MOTOR PUMP 125-250
UNI EN 12845

CENTRIFUGAL PUMP

COUPLING JOINT

Pump-motor connection via a cross cardan joint, complete with a safety guard UNI EN 12845 10.1 The cardan joint prevents the transmission of vibrations between the diesel engine and the pipes

KEY

NID	Nom. Intake Diameter
NDD	Nom. Delivery Diameter
NCD	Nom. Column Diameter
NS	Negative suction head set-up
PS	Positive suction head set-up
AD	Only found in the Negative suction head version **NS**

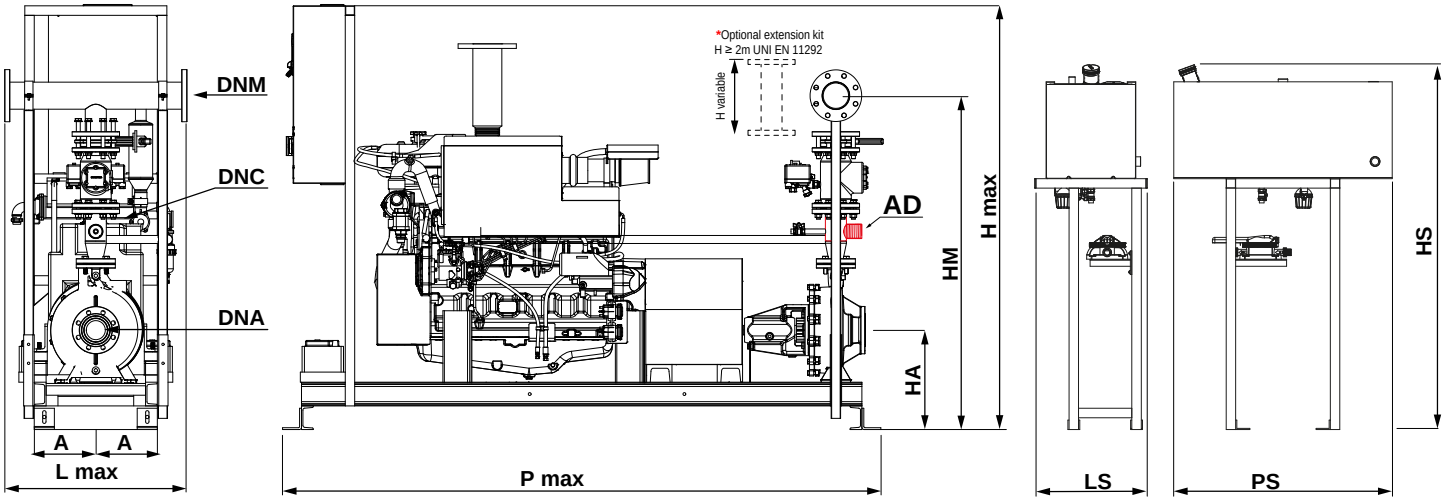

* H rise optional extension ≥ 2m

DIMENSIONS AND WEIGHTS OF EUROFIRE WITH MOTOR PUMPS 125-250

Jockey pumps on page 39

Q max	PRODUCT CODE 125-250					Power Pump	Heat exchange system	NID.	DNM	HA	HM		A	H max	L max	P max	Weight	Tank Diesel			
											SP	ST									
m³/h	COMP..	ID Pump	DNC		HYDRAULIC CONFIG.	kW Diesel		Ø	Ø	mm	mm	mm	mm	mm	mm	mm	kg	Litres	LS	PS	HS
≤ 380	GCOMO	485-501-502-503	150	H	/NS - /PS	108	Water/Water	150	200	580	1971	1822*	460	2141	1070	2460	1742	350	820	950	1837
	GCOMO	510-515-516-520-525	150	H	/NS - /PS	149	Water/Water	150	200	620	2011	1862*	460	2181	1070	2710	1850	350	820	950	1837
> 380	GCOMO	485-501-502-503	200	I	/NS - /PS	108	Water/Water	150	250	580	2175	2025	460	2378	1120	2460	1802	350	820	950	1837
	GCOMO	510-515-516-520-525	200	I	/NS - /PS	149	Water/Water	150	250	620	2215	2065	460	2418	1120	2710	1962	350	820	950	1837

Fire-fighting units catalogue - Edition: September-2021

EUROFIRE WITH MOTOR PUMP 125-315
UNI EN 12845

iPRO DIESEL

GSM

PERFORMANCE RANGE

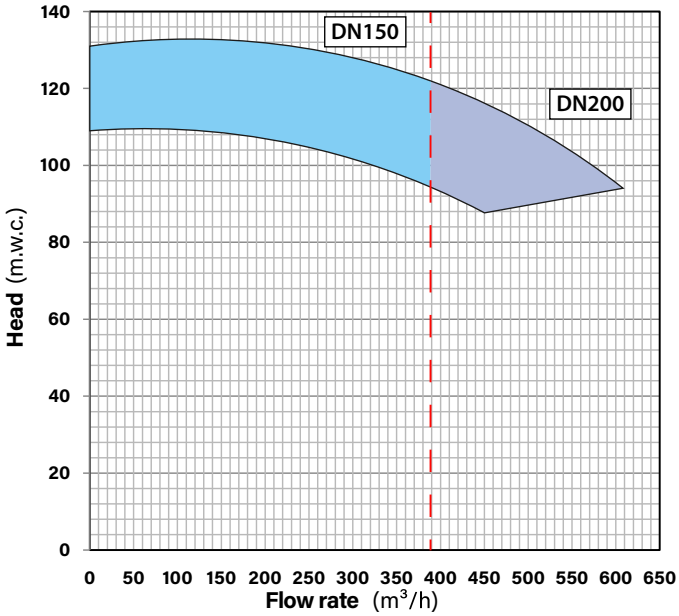

CENTRIFUGAL PUMP

END SUCTION normalised single-impeller centrifuge with **BACK PULL OUT** horizontal shaft, with a spiral diffuser and separate support; axial intake and radial delivery UNI EN 12845 10.1

- Pump body and impeller: EN GJL 250 cast iron
- Shaft: AISI 431 Stainless Steel
- Mechanical seal: Ceramic-Graphite

MOTOR

Top brand endothermic engine with direct air cooling system up to 26.5 kW and greater power outputs with a heat exchanger.
Power calculated based on the power absorbed at the point of the characteristic curve which corresponds to a **NPSH of 16 m UNI EN 12845:2020 10.1**
NA: continuous overloadable power 10% DIN 6271 - ISO 3046-1

HYDRAULIC PUMPS 125-315 EFFICIENCY

Electric Version page 88

Pump Model	Pump ID	Motor		Pump Fittings			Flow Rate - m³/h											
		Electrical	Diesel	Intake	Delivery													
		kW	kW	Ø	Ø		0	100	150	200	250	300	350	400	450	500	550	600
125-315/1	530	160	177	150	125	H (mwc)	109	109	109	108	105.5	102	98	94	88			
125-315/3	489	200	202	150	125		121	120	119	118	116	113	110	105	100			
125-315/5	491	200	202	150	125		123	123	122.5	122	121	119	116	113	108	103	97	92
125-315/4	537	250	222	150	125		131	131	130	129	128	126	124	121	116	112		

The values to the left of the reference refer to the maximum allowed delivery speed of 6 m/sec - The RED values entail speeds higher than 6 m/sec - The Values with GREY background indicate NPSH-R > 5m values.
For installations in HHS-HHP systems, contact our technical department. Nominal hydraulic characteristics of flow rate and head at the pump inlet, with performance tolerances according to UNI EN ISO 9906:2012 Grade 3B

EUROFIRE WITH MOTOR PUMP 125-315
UNI EN 12845

CENTRIFUGAL PUMP

COUPLING JOINT

Pump-motor connection via a cross cardan joint, complete with a safety guard UNI EN 12845 10.1 The cardan joint prevents the transmission of vibrations between the diesel engine and the pipes

KEY

NID	Nom. Intake Diameter
NDD	Nom. Delivery Diameter
NCD	Nom. Column Diameter
NS	Negative suction head set-up
PS	Positive suction head set-up
AD	Only found in the Negative suction head version **NS**

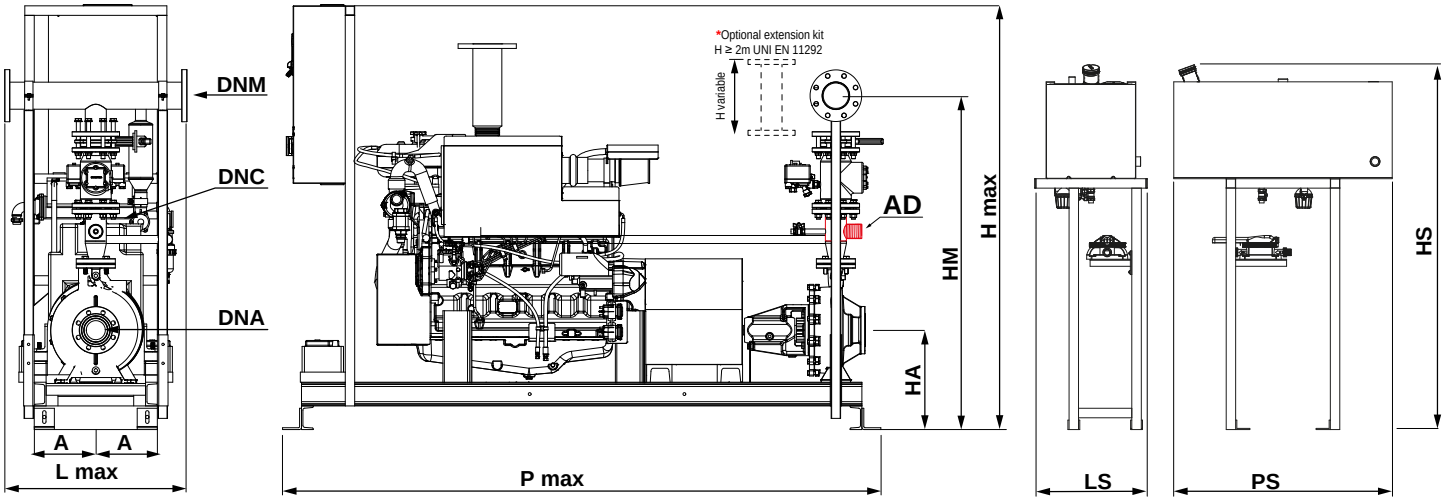

* H rise optional extension ≥ 2m

DIMENSIONS AND WEIGHTS OF EUROFIRE WITH MOTOR PUMPS 125-315

Jockey pumps on page 39

Q max	PRODUCT CODE 125-315					Power Pump	Heat exchange system	NID.	DNM	HA	HM		A	H max	L max	P max	Weight	Tank Diesel			
											SP	ST									
m³/h	COMP..	ID Pump	DNC		HYDRAULIC CONFIG.	kW Diesel		Ø	Ø	mm	mm	mm	mm	mm	mm	mm	kg	Litres	LS	PS	HS
≤ 380	GCOMO	530	150	H	/NS - /PS	177	Water/Water	150	200	600	1991	1842*	430	2161	1070	2860	1848	350	820	950	1487
	GCOMO	489-491	150	H	/NS - /PS	202	Water/Water	150	200	620	2011	1862*	460	2181	1070	3010	1716	350	820	950	1837
	GCOMO	537	150	H	/NS - /PS	222	Water/Water	150	200	620	2011	1862*	460	2181	1070	3010	1816	350	820	950	1837
> 380	GCOMO	530	200	I	/NS - /PS	177	Water/Water	150	250	600	2195	2045	430	2398	1120	2860	1978	350	820	950	1487
	GCOMO	489-491	200	I	/NS - /PS	202	Water/Water	150	250	620	2215	2065	460	2418	1120	3010	1846	350	820	950	1837
	GCOMO	537	200	I	/NS - /PS	222	Water/Water	150	250	620	2215	2065	460	2418	1120	3010	1946	350	820	950	1837

Fire-fighting units catalogue - Edition: September-2021

EUROFIRE WITH MOTOR PUMP 150-315
UNI EN 12845

PERFORMANCE RANGE

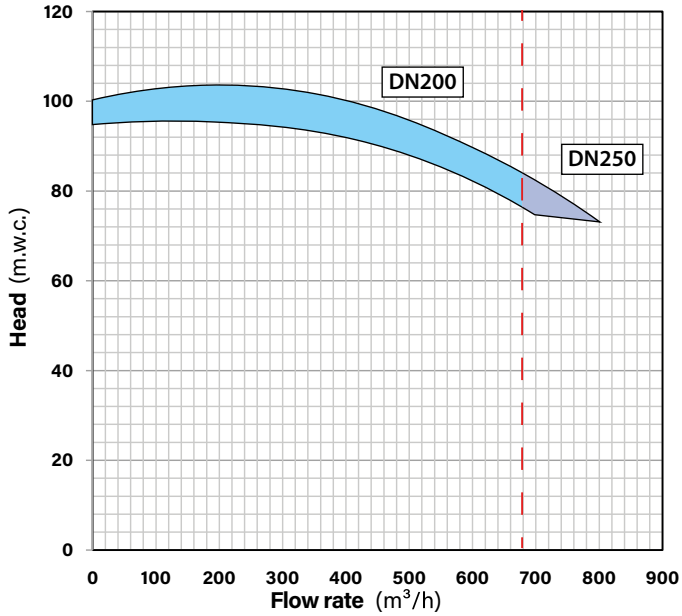

iPRO DIESEL

GSM

CENTRIFUGAL PUMP

END SUCTION normalised single-impeller centrifuge with **BACK PULL OUT** horizontal shaft, with a spiral diffuser and separate support; axial intake and radial delivery UNI EN 12845 10.1

- Pump body and impeller: EN GJL 250 cast iron
- Shaft: AISI 431 Stainless Steel
- Mechanical seal: Ceramic-Graphite

MOTOR

Top brand endothermic engine with direct air cooling system up to 26.5 kW and greater power outputs with a heat exchanger.
Power calculated based on the power absorbed at the point of the characteristic curve which corresponds to a **NPSH of 16 m UNI EN 12845:2020 10.1**
NA: continuous overloadable power 10% DIN 6271 - ISO 3046-1

HYDRAULIC PUMPS 150-315 EFFICIENCY

Electric Version page 90

Pump Model	Pump ID	Motor		Pump Fittings			Flow Rate - m³/h											
		Electrical	Diesel	Intake	Delivery													
		kW	kW	Ø	Ø		0	200	250	300	350	400	450	500	550	600	700	800
150-315/1	540	200	202	200	150	H	95	95	95	94.5	94	92.5	90.5	88	85	82	75	
150-315/6	545	250	222	200	150		100	103	103	103	102	100	97.5	95	92.5	90	82	73

The values to the left of the reference refer to the maximum allowed delivery speed of 6 m/sec - The RED values entail speeds higher than 6 m/sec - The Values with GREY background indicate NPSH-R > 5m values.
For installations in HHS-HHP systems, contact our technical department. Nominal hydraulic characteristics of flow rate and head at the pump inlet, with performance tolerances according to UNI EN ISO 9906:2012 Grade 3B

EUROFIRE WITH MOTOR PUMP 150-315
UNI EN 12845

CENTRIFUGAL PUMP

COUPLING JOINT

Pump-motor connection via a cross cardan joint, complete with a safety guard UNI EN 12845 10.1 The cardan joint prevents the transmission of vibrations between the diesel engine and the pipes

KEY

NID	Nom. Intake Diameter
NDD	Nom. Delivery Diameter
NCD	Nom. Column Diameter
NS	Negative suction head set-up
PS	Positive suction head set-up
AD	Only found in the Negative suction head version **NS**

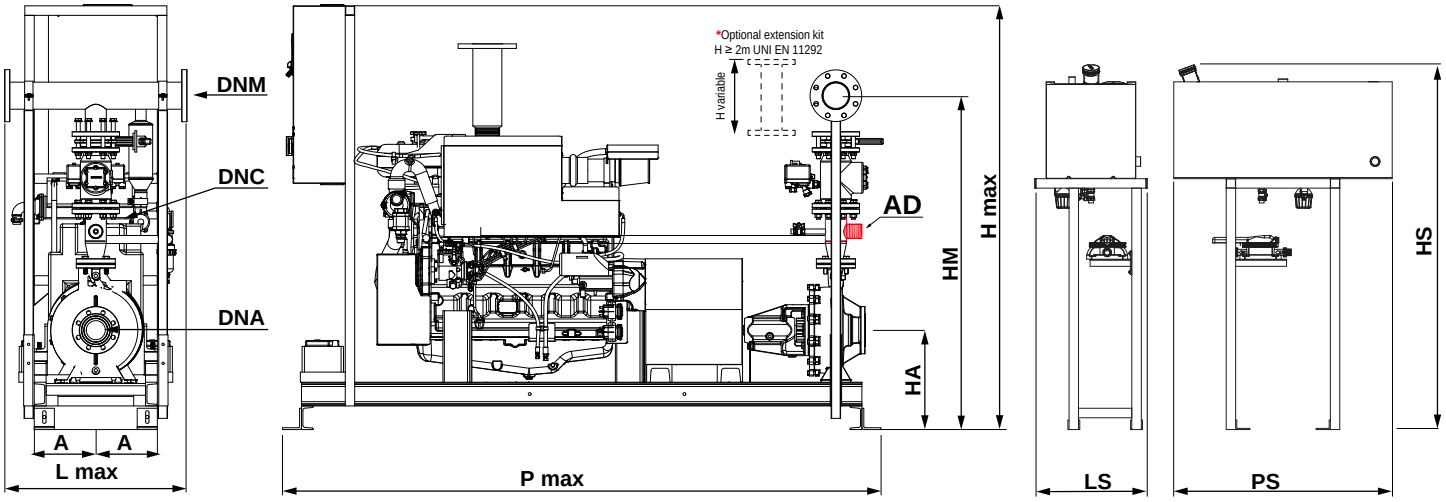

* H rise optional extension ≥ 2m

DIMENSIONS AND WEIGHTS OF EUROFIRE WITH MOTOR PUMPS 150-315

Jockey pumps on page 39

Q max	PRODUCT CODE 150-315					Power Pump	Heat exchange system	NID.	DNM	HA	HM		A	H max	L max	P max	Weight	Tank Diesel			
											SP	ST									
m³/h	COMP..	ID Pump	DNC		HYDRAULIC CONFIG.	kW Diesel		Ø	Ø	mm	mm	mm	mm	mm	mm	mm	kg	Litres	LS	PS	HS
≤ 380	GCOMO	540	150	H	/NS - /PS	202	Water/Water	150	250	600	2170	1990	460	2285	1120	3010	1763	350	820	950	1487
	GCOMO	545	150	H	/NS - /PS	222	Water/Water	150	250	580	2190	1888	460	2305	1120	3010	1816	350	820	950	1837
> 380	GCOMO	540	200	I	/NS - /PS	202	Water/Water	200	300	620	2250	2090	460	2365	1220	3010	1763	350	820	950	1487
	GCOMO	545	200	I	/NS - /PS	222	Water/Water	200	300	620	2270	2988	460	2385	1220	3010	1946	350	820	950	1837

Fire-fighting units catalogue - Edition: September-2021

EUROFIRE WITH MOTOR PUMP 150-500
UNI EN 12845

iPRO DIESEL

GSM

PERFORMANCE RANGE

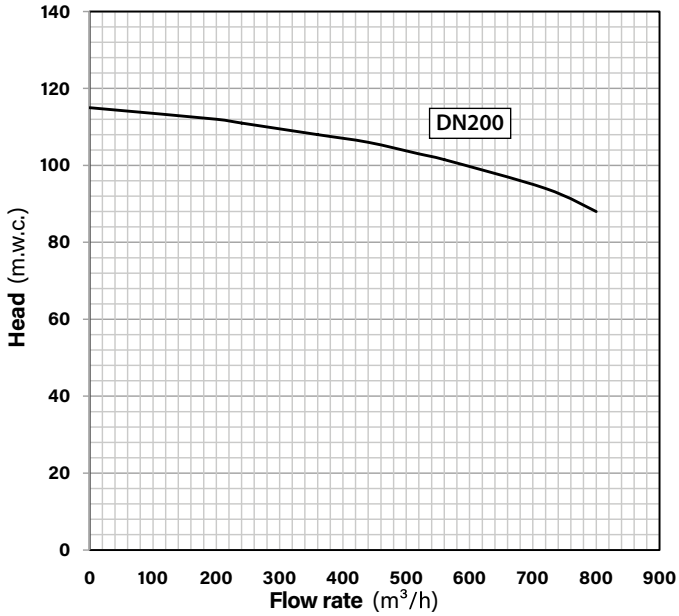

CENTRIFUGAL PUMP

END SUCTION normalised single-impeller centrifuge with **BACK PULL OUT** horizontal shaft, with a spiral diffuser and separate support; axial intake and radial delivery UNI EN 12845 10.1

- Pump body and impeller: EN GJL 250 cast iron
- Shaft: AISI 431 Stainless Steel
- Mechanical seal: Ceramic-Graphite

MOTOR

Top brand endothermic engine with direct air cooling system up to 26.5 kW and greater power outputs with a heat exchanger.
Power calculated based on the power absorbed at the point of the characteristic curve which corresponds to a **NPSH of 16 m UNI EN 12845:2020 10.1**
NA: continuous overloadable power 10% DIN 6271 - ISO 3046-1

HYDRAULIC PUMPS 150-500 EFFICIENCY

Pump Model	Pump ID	Motor		Pump Fittings			Flow Rate - m³/h											
		Electrical	Diesel	Intake	Delivery													
		kW	kW	Ø	Ø		0	200	240	320	360	400	440	520	560	600	720	800
150-500/2	600	250	255	200	150	H	115	112	111	109.5	108	107	106	103	101.5	100	94	88

The values to the left of the reference refer to the maximum allowed delivery speed of 6 m/sec - The RED values entail speeds higher than 6 m/sec - The Values with GREY background indicate NPSH-R > 5m values.
For installations in HHS-HHP systems, contact our technical department. Nominal hydraulic characteristics of flow rate and head at the pump inlet, with performance tolerances according to UNI EN ISO 9906:2012 Grade 3B

EUROFIRE WITH MOTOR PUMP 150-500
UNI EN 12845

CENTRIFUGAL PUMP

COUPLING JOINT

Pump-motor connection via a cross cardan joint, complete with a safety guard UNI EN 12845 10.1 The cardan joint prevents the transmission of vibrations between the diesel engine and the pipes

KEY

NID	Nom. Intake Diameter
NDD	Nom. Delivery Diameter
NCD	Nom. Column Diameter
NS	Negative suction head set-up
PS	Positive suction head set-up
AD	Only found in the Negative suction head version **NS**

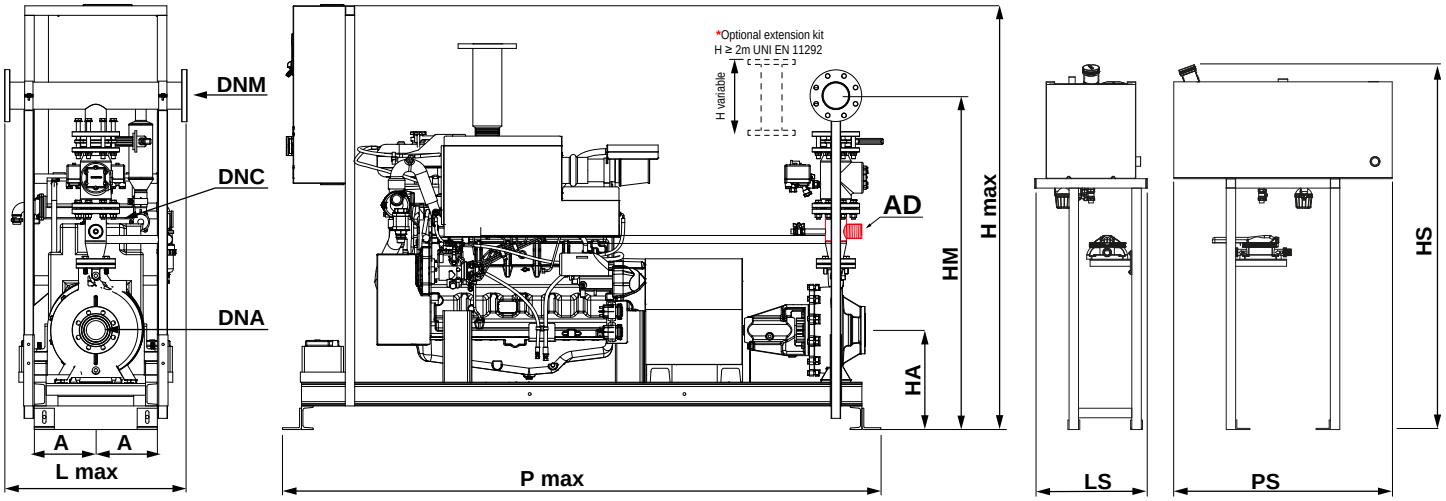

* H rise optional extension ≥ 2m

DIMENSIONS AND WEIGHTS OF EUROFIRE WITH MOTOR PUMPS 150-500

Jockey pumps on page 39

Q max	PRODUCT CODE 150-500				Power Pump	Heat exchange system	NID.	DNM	HA	HM		A	H max	L max	P max	Weight	Tank Diesel			
										SP	ST									
m³/h	COMP..	ID Pump	DNC	HYDRAULIC CONFIG.	kW Diesel		Ø	Ø	mm	mm	mm	mm	mm	mm	mm	kg	Litres	LS	PS	HS
≤ 680	GC0M0	600	200	I /NS - /PS	255	Water/Water	150	200	620	2270	2988	460	2385	1220	3010	1946	350	820	950	1487

The technical data are not binding and can be modified without prior notice | The images are indicative and not binding

FAQ

FIRE FIGHTING UNIT
HOW TO CALCULATE THE MOTOR POWER

For pumps that have a characteristic curve of increasing power (typical in "Back-Pull-Out" centrifugal pumps), the motor power must guarantee pump operation over its entire characteristic curve, from ZERO flow to the maximum flow rate corresponding to an NPSH-R of 16 m. (Point 10.1. UNI EN 12845

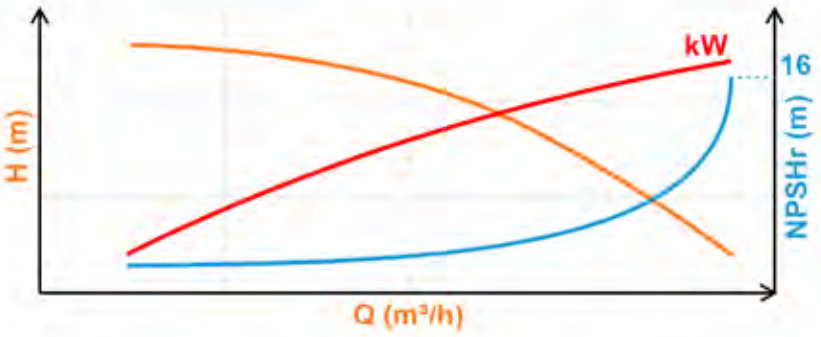

FIRE FIGHTING UNIT
WHICH POWER CURVE MUST THE DIESEL ENGINE FOLLOW

In the case of centrifugal pumps, the diesel engine must be able to supply the power required by the pump when it requires an NPSH of 16 to work and must do so according to UNI EN 12845 10.9.1, continuously at full load, at the installation value in accordance with ISO 3046 - NA: Continuous overloadable power 10% DIN 6271 - ISO 3046-1

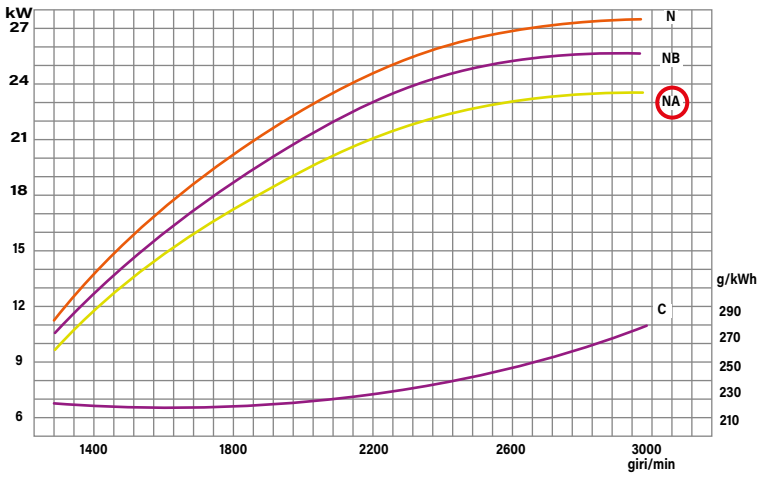

Fire-fighting units catalogue - Edition: September-2021

MORE INFORMATION
WWW.IDRO-ELETTRICA.IT

VERTICALFIRE ELECTRIC

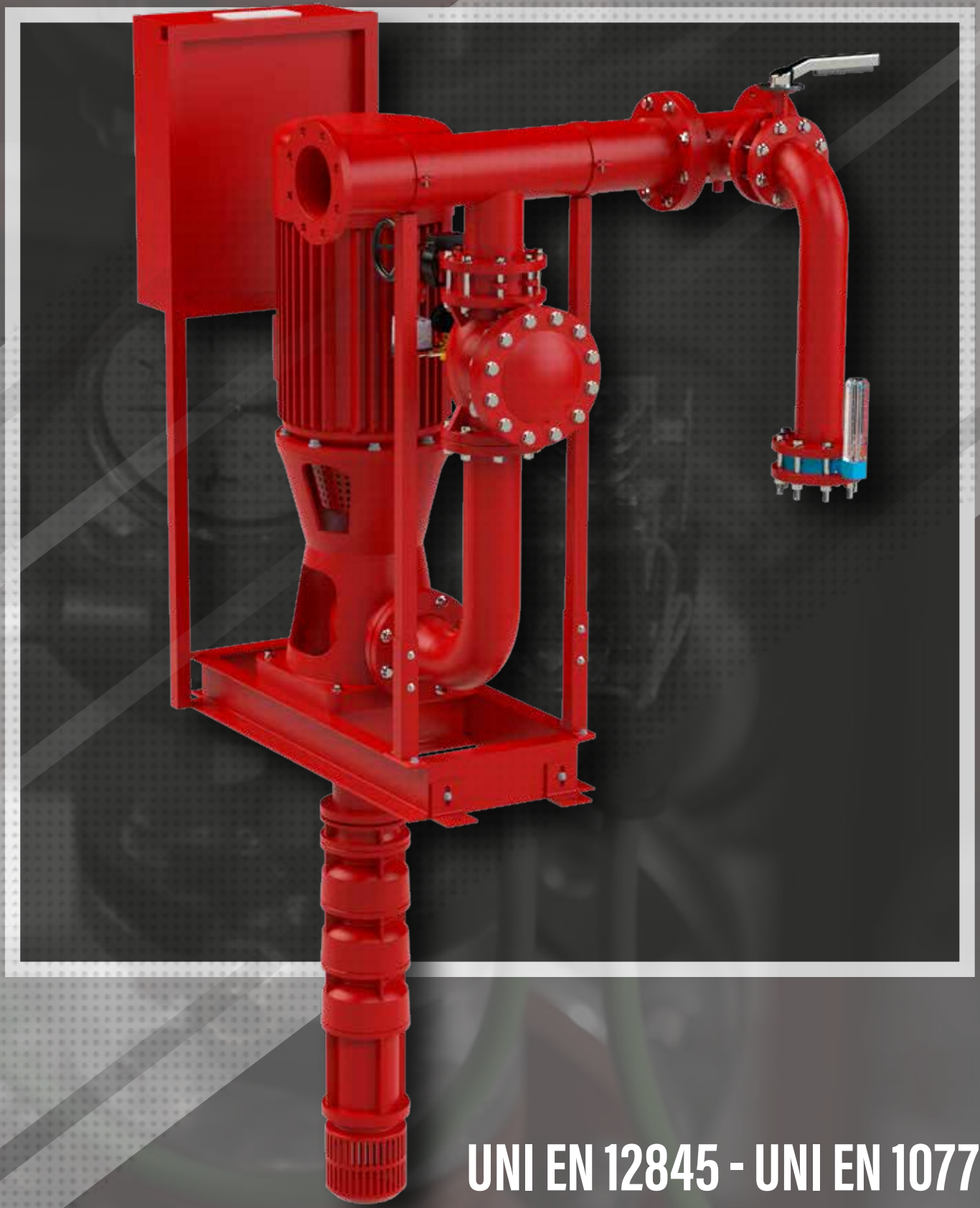

UNI EN 12845 - UNI EN 10779

ELECTRICAL VERTICALFIRE

FIRE-FIGHTING PRESSURISATION UNITS UNI EN 12845 WITH SUBMERSIBLE AXIAL FLOW VERTICAL SHAFT PUMPS

MAIN FEATURES

The VERTICALFIRE series includes units with:

Flow rate Q	up to	450	m^3/h
Head H	up to	168	mwc
Electric pump	up to	110	kW
Diesel pump	up to	108	kW in NA curve

Every module is autonomous and reflects the definition of a pumping unit (PUMP-SET) as described in **UNI 11292:2019 3.15.**

Every pumping unit of the **ELECTRIC VERTICALFIRE** series therefore includes:

- Main submersible axial flow vertical shaft pumps (VTP), with connection heads for electric motors **UNI EN 12845 10.1**
- Electric motors with power exceeding that required by the pump at the peak of the power curve **UNI EN 1284510.1**
- Spacer flexible coupling **UNI EN 12845 10.1**
- Base in metal profiles
- Electrical panel with Epro intelligent control unit
- Hydraulic accessories external to the pump-set with diameters sized according to **UNI EN 12845 13.2.3**
- Electric accessories external to the pump-set

Every pumping unit is designed to be independently secured to the foundation/base floor **UNI 11292:2019 6.6**

In this case, the reference hydraulic diagram is that of the underground storage tank with the pump compartment placed immediately above it. Choosing to use this type of machine to set up the units guarantees that the main pumps are always in positive suction head. Thereby eliminating any issue related to pump priming and accessibility of the components of the pressurisation unit.

Hydraulic diagram page 147
List of components page 148
Completion accessories page 215

Fire-fighting units catalogue - Edition: September-2021

The technical data are not binding and can be modified without prior notice | The images are indicative and not binding

ELECTRICAL VERTICALFIRE

Fire-fighting pressurisation units according to UNI EN 12845
With submersible axial flow vertical shaft electric pumps

HYDRAULIC DIAGRAM

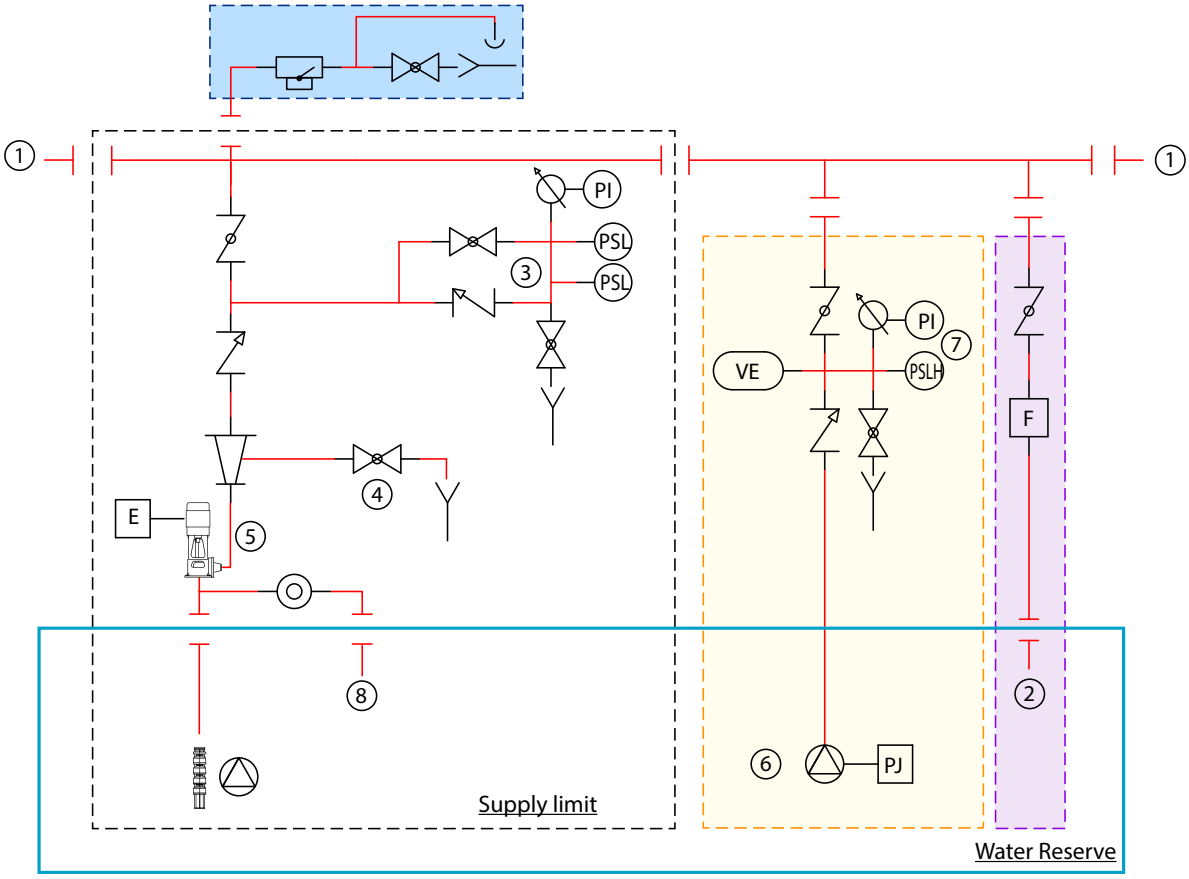

KEY

1. Delivery to the system
2. Return in flow meter tank
3. Pressure switch test circuit
4. Drain valve (leak test)
5. Main pump
6. Jockey pump
7. Jockey pump pressure switch unit
8. Priming tank water supply

Instruments

Piping

Optional supply

Flow Meter Kit

Sprinkler circuit kit

Jockey pump kit

	Pump		Normally open ball valve	PSLH	Jockey pump start/stop pressure switch
E	Main pump electric motor		Normally closed ball valve	PSL	Pump start pressure switch
D	Main pump diesel engine		Throttle valve with handwheel	VI	Vacuum gauge
PJ	Jockey pump electrical motor		Throttle valve with lever		Water Reserve Tank
	Eccentric cone		Clapet check valve	A	Priming Tank 500 ℓ
	Expansion		Safety valve		EC UNI EN 12259-5 flow switch
VE	Preloaded expansion vessel		Gate valve with handwheel		Pendent sprinkler head 1/2 k=80
PI	Pressure gauge	F	Flowmeter	IF	Flow indicator
	Diaphragm		Open drain		Heat exchanger
	"Y' filter		Pressure reducer		Filling float

Fire-fighting units catalogue - Edition: September-2021

ELECTRICAL VERTICALFIRE
Fire-fighting pressurisation units according to UNI EN 12845
With submersible axial flow vertical shaft electric pumps

MAIN COMPONENTS

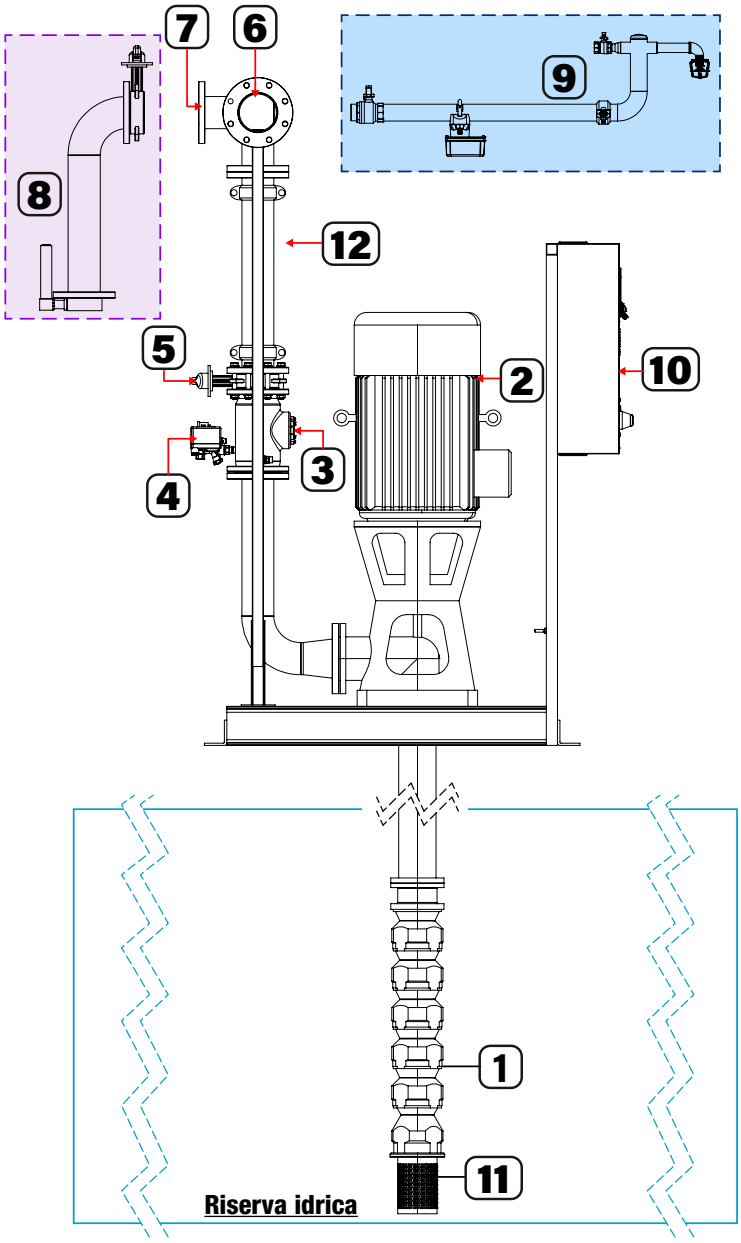

1	Main pump
2	Main pump Electric Motor
3	Inspectable check valve
4	Control and test circuit
5	Shut-off valve
6	Delivery manifold
7	Flanged stub pipe for flow test circuit

8	Flowmeter kit complete with upstream and downstream pipe sections L> 5 diam.
9	2″ Sprinkler Kit complete with Flow switch in accordance with UNI EN 12259-5
10	Electric Control Unit
11	Intake filter
12	Optional extension kit H ≥ 2 m UNI EN 11292

Fire-fighting units catalogue - Edition: September-2021

The technical data are not binding and can be modified without prior notice | The images are indicative and not binding

POWER LINE
WHAT CHARACTERISTICS MUST IT HAVE ?

According to UNI EN 12845 10.8.2, the power supply for the control panel of the electric pump must be solely dedicated to the sprinkler pumping unit and separated from all other connections. When allowed by the power grid provider, the supply to the control panel of the electric pump must be taken upstream of the main power switch of the buildings. The cables must be flame retardant and have a combustion reaction in accordance with EN 60332, test type B or C. The cables required for sprinkler system operation must be selected and installed as to be kept operational even in case of fire. The current for the correct sizing of the cables must be determined considering 150% of the maximum possible current at full load UNI EN 12845 10.8.4

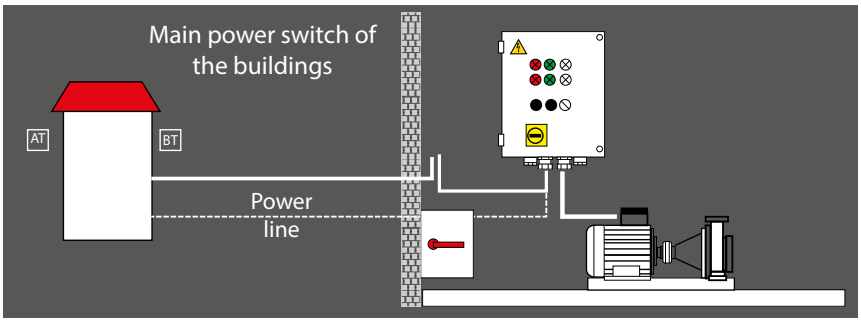

ELECTRIC PUMP CONTROL PANEL
WHAT ARE THE UNI EN 12845 REQUIREMENTS ?

According to UNI EN 12845 10.8.5 (except in the case of submersible pumps), the pump control panel must be in the same compartment as the electric motor and the pump and the electric pump panel must be able to:

- Automatically start the motor when it receives a signal from the pressure switches
- Start the motor in manual mode
- Stop the motor only by manual intervention (if the overpressure unit exclusively serves a hydrant system, for activities that are not constantly manned. If it can be stopped automatically, after the pressure has been kept constantly above the start-up pressure of the pump itself for at least 20 straight minutes – UNI 10779).
- Contacts must be in AC-3 – EN 60947-1 and EN

MORE INFORMATION
WWW.IDRO-ELETTRICA.IT

VERTICALFIRE WITH ELECTRIC PUMP VTP60E
UNI EN 12845

PRO ELECTRIC

GSM

PERFORMANCE RANGE

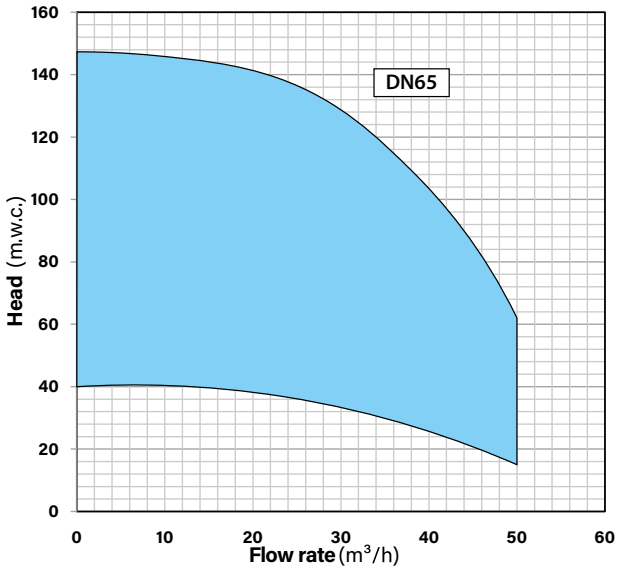

VERTICAL PUMP

Submersible axial flow vertical shaft pump, pump body connected to the control unit through the line shaft, fitted with an anti-rotation device to prevent machine counter-rotation when emptying the line shaft.

PUMP

- Control unit — Grey cast iron
- Pump body — Grey cast iron
- Impellers and Diffusers — Grey cast iron
- Shaft — Stainless steel
- Transmission sleeve — Stainless steel
- Tapered bush — Stainless steel

LINE SHAFT:

- Rod support — Grey cast iron
- Transmission rod — Stainless steel
- Pipe — Stainless steel

Note: Line shaft up to a maximum length of 4 m (longer lengths on request)

MOTOR

Three-phase asynchronous closed externally self-ventilated with cage rotor. Greater power than the maximum absorbed power at the peak of the pump power curve **UNI EN 12845:2020 10.1**

VERTICALFIRE PUMPS VTP60E PERFORMANCE

Diesel Version page 174

Pump Model	ID Pump	Motor		Submersion		Flow Rate - m³/h					
		Electrical	Diesel								
		kW	kW	mm		0	10	20	30	40	50
VTP 60E/3A	021	5.5	6.2	370	H (mwc)	40	40	38	35	28	17
VTP 60E/4B	022	5.5	6.2	370		47	46	45	40	30	15
VTP 60E/4A	023	7.5	6.2	370		54	53	51	47	38	22
VTP 60E/5B	030	7.5	7	370		59	58	56	50	38	19
VTP 60E/5A	035	11	10.5	370		67	67	64	59	47	28
VTP 60E/6B	040	7.5	10.5	370		71	70	67	60	45	22
VTP 60E/6A	045	11	10.5	370		80	80	77	70	56	34
VTP 60E/7A	047	11	10.5	370		94	93	90	82	66	39
VTP 60E/8B	048	11	10.5	370		94	93	90	80	60	30
VTP 60E/9B	055	15	12.8	370		106	104	101	90	68	33
VTP 60E/8A	060	15	12.8	370		107	106	102	94	75	45
VTP 60E/10B	065	15	12.8	370		118	116	112	100	76	37
VTP 60E/9A	068	15	17.5	370		121	120	115	105	85	50
VTP 60E/10A	070	15	17.5	370		134	133	128	117	94	56
VTP 60E/11A	080	18.5	17.5	370		147	146	141	129	103	62

Values with a GREY background indicate NPSH-R values > 8m.
For installations in HHS-HHP systems, contact our technical department. Nominal hydraulic characteristics of flow rate and head at the pump inlet, with performance tolerances according to UNI EN ISO 9906:2012 Grade 3B

The technical data are not binding and can be modified without prior notice | The images are indicative and not binding

VERTICALFIRE WITH ELECTRIC PUMP VTP60E
UNI EN 12845

VERTICAL PUMP

HEADER

KEY

NDD	Nom. Delivery Diameter
NCD	Nom. Column Diameter

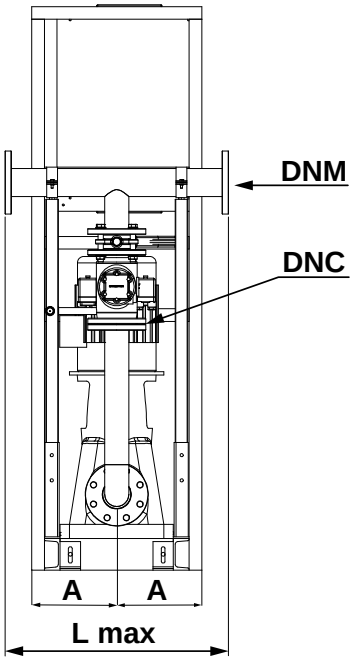

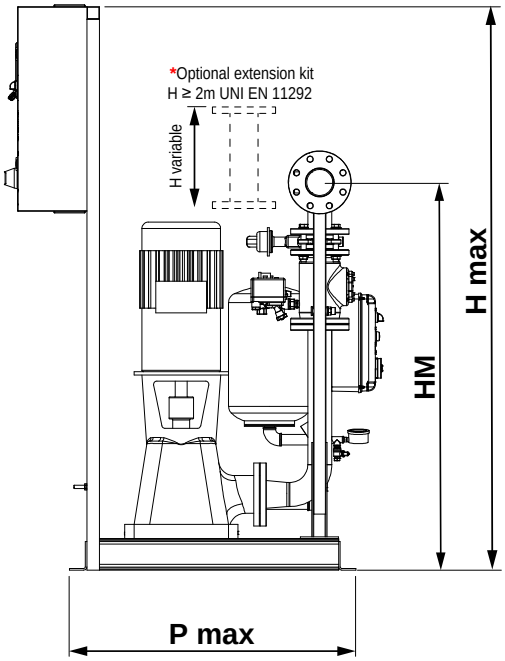

* H rise optional extension ≥ 2m

DIMENSIONS AND WEIGHTS OF VERTICALFIRE WITH ELECTRIC PUMPS VTP60E

Jockey pumps on page 39

Q max	PRODUCT CODE VTP60E				Power Pump	DNM	HM	A	H max	L max	P max	Weight
m³/h	COMP..	Pump ID	DNC		kW Electrical	Ø	mm	mm	mm	mm	mm	kg
≤ 70	GV0E0	021-022	065	D	5.5	80	1231*	270	1790	540	1210	420
	GV0E0	023-030-040	065	D	7.5	80	1231*	270	1790	540	1210	560
	GV0E0	035-045-047-048	065	D	11	80	1231*	270	1790	540	1240	595
	GV0E0	055-060-065-068-070	065	D	15	80	1231*	270	1790	540	1240	630
	GV0E0	080	065	D	18.5	80	1231*	270	1790	540	1240	710

Fire-fighting units catalogue - Edition: September-2021

VERTICALFIRE WITH ELECTRIC PUMP VTP 60F
UNI EN 12845

PRO ELECTRIC

GSM

PERFORMANCE RANGE

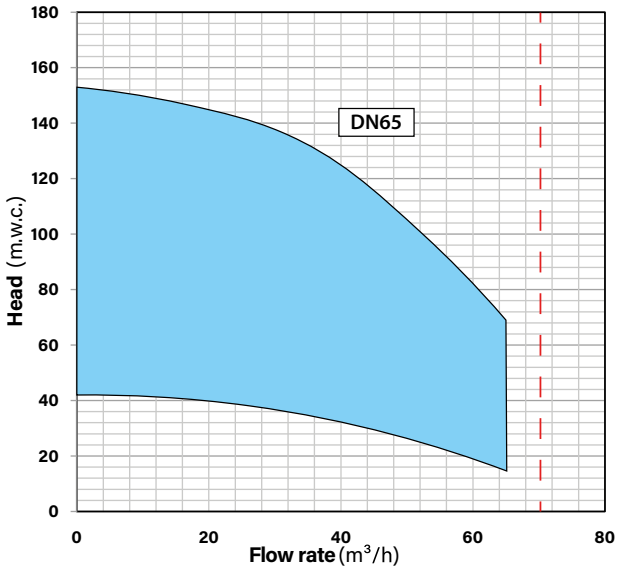

VERTICAL PUMP

Submersible axial flow vertical shaft pump, pump body connected to the control unit through the line shaft, fitted with an anti-rotation device to prevent machine counter-rotation when emptying the line shaft.

PUMP

- Control unit — Grey cast iron
- Pump body — Grey cast iron
- Impellers and Diffusers — Grey cast iron
- Shaft — Stainless steel
- Transmission sleeve — Stainless steel
- Tapered bush — Stainless steel

LINE SHAFT:

- Rod support — Grey cast iron
- Transmission rod — Stainless steel
- Pipe — Stainless steel

Note: Line shaft up to a maximum length of 4 m (longer lengths on request)

MOTOR

Three-phase asynchronous closed externally self-ventilated with cage rotor. Greater power than the maximum absorbed power at the peak of the pump power curve **UNI EN 12845:2020 10.1**

VERTICALFIRE PUMPS VTP 60F PERFORMANCE

Diesel Version page 176

Pump Model	ID Pump	Motor		Submersion		Flow Rate - m³/h							
		Electrical	Diesel										
		kW	kW	mm		0	10	20	30	40	50	60	65
VTP 60F/3B	082	7.5	6.2	370	H (mwc)	42	41	39	38	34	28	20	16
VTP 60F/3A	083	7.5	7	370		47	45	44	42	40	35	27	23
VTP 60F/4B	084	7.5	10.5	370		56	54	53	50	45	37	26	21
VTP 60F/4A	085	11	10.5	370		62	61	58	56	53	46	36	31
VTP 60F/5B	087	11	10.5	370		70	68	66	63	56	46	33	26
VTP 60F/5A	090	15	12.8	370		78	76	73	70	66	58	46	39
VTP 60F/6B	092	11	12.8	370		83	81	79	75	67	56	39	31
VTP 60F/6A	095	15	17.5	370		94	91	88	84	80	70	55	46
VTP 60F/8B	100	15	17.5	370		111	108	105	100	90	74	52	42
VTP 60F/9B	105	18.5	17.5	370		125	122	118	113	101	83	59	47
VTP 60F/10B	110	18.5	25.2	370		139	136	132	125	112	93	66	52
VTP 60F/9A	120	22	25.2	370		140	136	131	126	119	104	82	69
VTP 60F/11B	121	22	25.2	370		153	149	145	138	123	102	72	57

Values with a GREY background indicate NPSH-R values > 8m.
For installations in HHS-HHP systems, contact our technical department. Nominal hydraulic characteristics of flow rate and head at the pump inlet, with performance tolerances according to UNI EN ISO 9906:2012 Grade 3B

VERTICALFIRE WITH ELECTRIC PUMP VTP 60F
UNI EN 12845

VERTICAL PUMP

HEADER

KEY

NDD	Nom. Delivery Diameter
NCD	Nom. Column Diameter

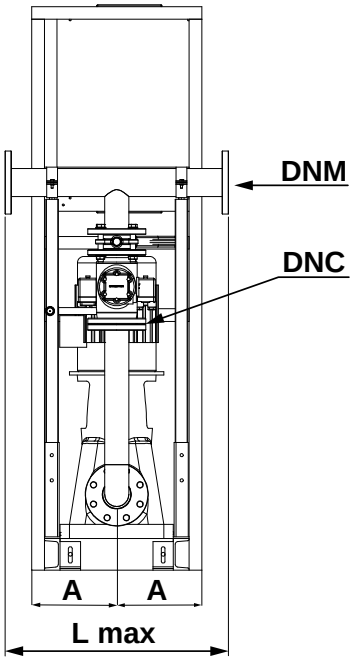

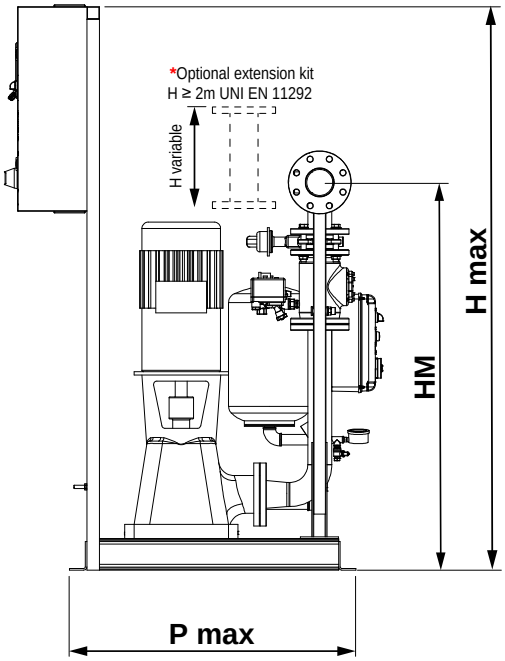

* H rise optional extension ≥ 2m

DIMENSIONS AND WEIGHTS OF VERTICALFIRE WITH ELECTRIC PUMPS VTP 60F

Jockey pumps on page 39

Q max	PRODUCT CODE VTP 60F				Power Pump	DNM	HM	A	H max	L max	P max	Weight
m³/h	COMP..	Pump ID	DNC		kW Electrical	Ø	mm	mm	mm	mm	mm	kg
≤ 70	GV0E0	082 - 083 - 084	065	D	7.5	80	1231*	270	1790	540	1210	420
	GV0E0	125 - 085 - 087 - 092	065	D	11	80	1231*	270	1790	540	1240	560
	GV0E0	090 - 095 - 098 - 100	065	D	15	80	1231*	270	1790	540	1240	595
	GV0E0	105 - 110	065	D	18.5	80	1291*	270	1790	540	1240	630
	GV0E0	120 - 121	065	D	22	80	1291*	270	1790	540	1240	710

Fire-fighting units catalogue - Edition: September-2021

VERTICALFIRE WITH ELECTRIC PUMP VTP 60G
UNI EN 12845

PRO ELECTRIC

GSM

PERFORMANCE RANGE

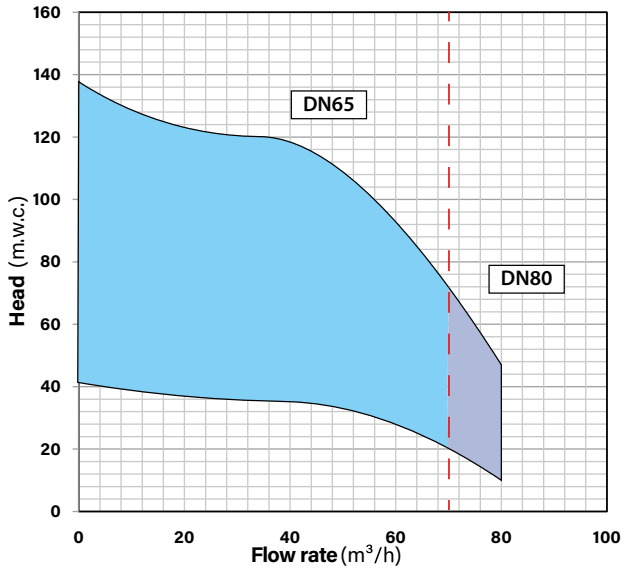

VERTICAL PUMP

Submersible axial flow vertical shaft pump, pump body connected to the control unit through the line shaft, fitted with an anti-rotation device to prevent machine counter-rotation when emptying the line shaft.

PUMP

- Control unit — Grey cast iron
- Pump body — Grey cast iron
- Impellers and Diffusers — Grey cast iron
- Shaft — Stainless steel
- Transmission sleeve — Stainless steel
- Tapered bush — Stainless steel

LINE SHAFT:

- Rod support — Grey cast iron
- Transmission rod — Stainless steel
- Pipe — Stainless steel

Note: Line shaft up to a maximum length of 4 m (longer lengths on request)

MOTOR

Three-phase asynchronous closed externally self-ventilated with cage rotor. Greater power than the maximum absorbed power at the peak of the pump power curve **UNI EN 12845:2020 10.1**

VERTICALFIRE PUMPS VTP 60G PERFORMANCE

Diesel Version page 178

Pump Model	ID Pump	Motor		Submersion		Flow Rate - m³/h						
		Electrical	Diesel									
		kW	kW	mm		0	20	40	50	60	70	80
VTP 60G/3A	123	7.5	6.2	370	H (mwc)	41	37	35	32	28	21	14
VTP 60G/4B	124	7.5	7	370		48	46	40	35	29	20	10
VTP 60G/4A	125	11	12.8	370		55	49	47	43	37	28	19
VTP 60G/5A	130	11	12.8	370		69	62	59	54	46	36	24
VTP 60G/6A	135	15	12.8	370		82	74	71	64	55	43	28
VTP 60G/7A	140	15	17.5	370		96	86	82	75	64	50	33
VTP 60G/8A	145	18.5	17.5	370		110	98	94	86	74	57	38
VTP 60G/9A	155	18.5	25.2	370		123	111	106	96	83	64	42
VTP 60G/10A	160	22	25.2	370		137	123	118	107	92	71	47

Values with a GREY background indicate NPSH-R values > 8m.
For installations in HHS-HHP systems, contact our technical department. Nominal hydraulic characteristics of flow rate and head at the pump inlet, with performance tolerances according to UNI EN ISO 9906:2012 Grade 3B

VERTICALFIRE WITH ELECTRIC PUMP VTP 60G
UNI EN 12845

VERTICAL PUMP

HEADER

KEY

NDD	Nom. Delivery Diameter
NCD	Nom. Column Diameter

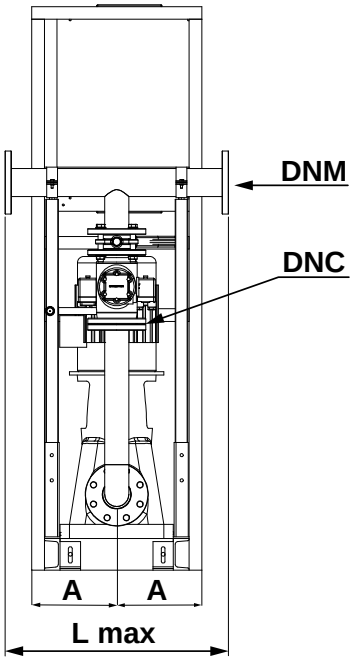

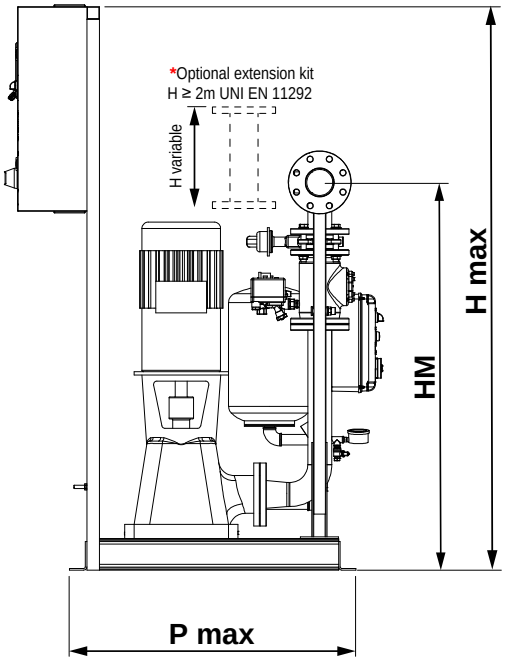

* H rise optional extension ≥ 2m

DIMENSIONS AND WEIGHTS OF VERTICALFIRE WITH ELECTRIC PUMPS VTP 60G

Jockey pumps on page 39

Q max	PRODUCT CODE VTP 60G				Power Pump	DNM	HM	A	H max	L max	P max	Weight
m³/h	COMP..	Pump ID	DNC		kW Electrical	Ø	mm	mm	mm	mm	mm	kg
≤ 70	GV0E0	123 - 124	065	D	7.5	80	1231*	270	1790	540	1210	420
	GV0E0	125 - 130	065	D	11	80	1231*	270	1790	540	1240	560
	GV0E0	135 - 140	065	D	15	80	1231*	270	1790	540	1240	595
	GV0E0	145 - 155	065	D	18.5	80	1231*	270	1790	540	1240	630
	GV0E0	160	065	D	22	80	1231*	270	1790	540	1240	710
> 70	GV0E0	124	080	E	7.5	100	1193*	270	1790	540	1210	430
	GV0E0	125 - 130	080	E	11	100	1193*	270	1790	540	1240	570
	GV0E0	135 - 140	080	E	15	100	1193*	270	1790	540	1240	605
	GV0E0	145 - 155	080	E	18.5	100	1193*	270	1790	540	1240	640
	GV0E0	160	080	E	22	100	1342*	270	1790	540	1240	720

The technical data are not binding and can be modified without prior notice | The images are indicative and not binding

VERTICALFIRE WITH ELECTRIC PUMP VTP 80E
UNI EN 12845

PRO ELECTRIC

GSM

PERFORMANCE RANGE

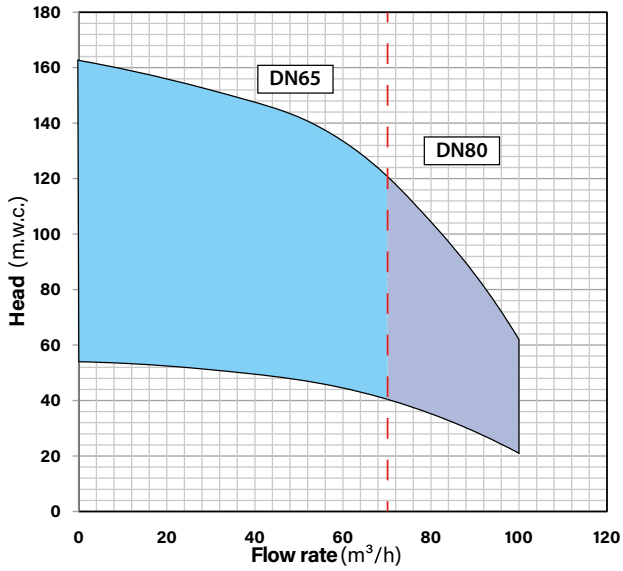

VERTICAL PUMP

Submersible axial flow vertical shaft pump, pump body connected to the control unit through the line shaft, fitted with an anti-rotation device to prevent machine counter-rotation when emptying the line shaft.

PUMP

- Control unit — Grey cast iron
- Pump body — Grey cast iron
- Impellers and Diffusers — Grey cast iron
- Shaft — Stainless steel
- Transmission sleeve — Stainless steel
- Tapered bush — Stainless steel

LINE SHAFT:

- Rod support — Grey cast iron
- Transmission rod — Stainless steel
- Pipe — Stainless steel

Note: Line shaft up to a maximum length of 4 m (longer lengths on request)

MOTOR

Three-phase asynchronous closed externally self-ventilated with cage rotor. Greater power than the maximum absorbed power at the peak of the pump power curve **UNI EN 12845:2020 10.1**

VERTICALFIRE PUMPS VTP 80E PERFORMANCE

Diesel Version page 180

Pump Model	ID Pump	Motor		Submersion		Flow Rate - m³/h							
		Electrical	Diesel										
		kW	kW	mm		0	20	40	60	70	80	90	100
VTP 80E/2B	171	11	12.8	487.5	H (mwc)	54	52	49	45	41	35	28	21
VTP 80E/3A	180	18.5	17.5	487.5		85	81	77	70	64	56	47	35
VTP 80E/3C	182	15	17.5	487.5		79	74	70	64	58	49	38	26
VTP 80E/4C	183	22	25.2	487.5		105	99	94	85	77	66	50	35
VTP 80E/4B	185	22	25.2	487.5		108	103	98	90	81	70	56	42
VTP 80E/5B	190	30	25.2	487.5		135	129	123	112	102	87	71	52
VTP 80E/5A	195	30	36.5	487.5		142	135	128	117	107	94	78	59
VTP 80E/6C	200	37	36.5	487.5		157	148	140	127	115	98	76	53
VTP 80E/6B	205	37	36.5	487.5		162	155	148	134	122	104	85	62

Values with a GREY background indicate NPSH-R values > 8m.
For installations in HHS-HHP systems, contact our technical department. Nominal hydraulic characteristics of flow rate and head at the pump inlet, with performance tolerances according to UNI EN ISO 9906:2012 Grade 3B

VERTICALFIRE WITH ELECTRIC PUMP VTP 80E
UNI EN 12845

VERTICAL PUMP

HEADER

KEY

NDD	Nom. Delivery Diameter
NCD	Nom. Column Diameter

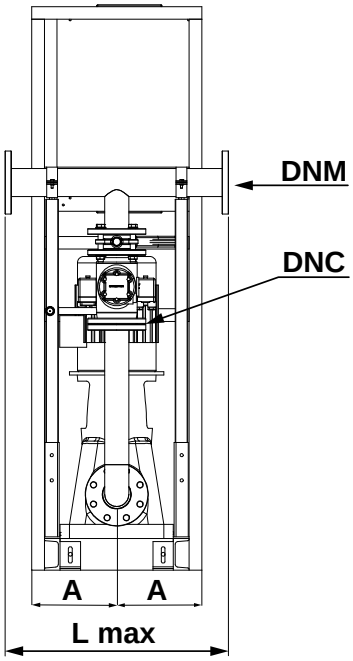

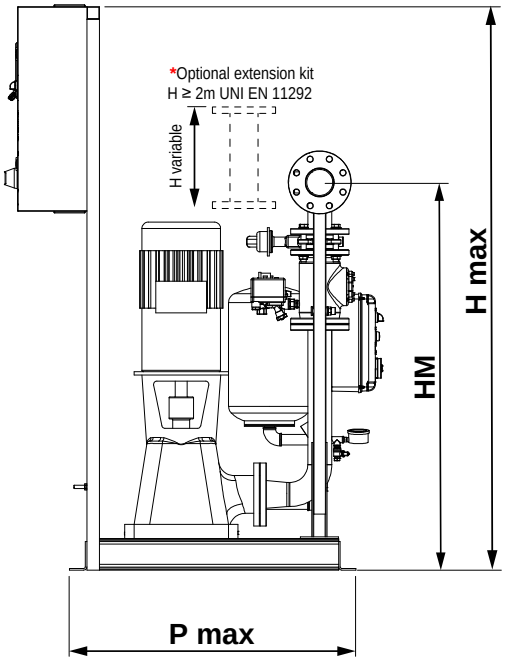

* H rise optional extension ≥ 2m

DIMENSIONS AND WEIGHTS OF VERTICALFIRE WITH ELECTRIC PUMPS VTP 80E

Jockey pumps on page 39

Q max	PRODUCT CODE VTP 80E				Power Pump	DNM	HM	A	H max	L max	P max	Weight
m³/h	COMP..	Pump ID	DNC		kW Electrical	Ø	mm	mm	mm	mm	mm	kg
≤ 70	GV0E0	171	065	D	11	80	1291*	270	1790	540	1240	580
	GV0E0	182	065	D	15	80	1291*	270	1790	540	1240	600
	GV0E0	180	065	D	18.5	80	1291*	270	1790	540	1240	650
	GV0E0	183 - 185	065	D	22	80	1291*	270	1790	540	1240	690
	GV0E0	190 - 195	065	D	30	80	1291*	275	1790	550	1390	750
	GV0E0	200 - 205	065	D	37	80	1291*	275	1790	550	1390	850
> 70	GV0E0	171	080	E	11	100	1341*	270	1790	540	1240	630
	GV0E0	182	080	E	15	100	1341*	270	1790	540	1240	650
	GV0E0	180	080	E	18.5	100	1341*	270	1790	540	1240	700
	GV0E0	183 - 185	080	E	22	100	1341*	270	1790	540	1240	740
	GV0E0	190 - 195	080	E	30	100	1341*	275	1790	550	1390	800
	GV0E0	200 - 205	080	E	37	100	1341*	275	1790	550	1390	900

Fire-fighting units catalogue - Edition: September-2021

VERTICALFIRE WITH ELECTRIC PUMP VTP 80F
UNI EN 12845

PERFORMANCE RANGE

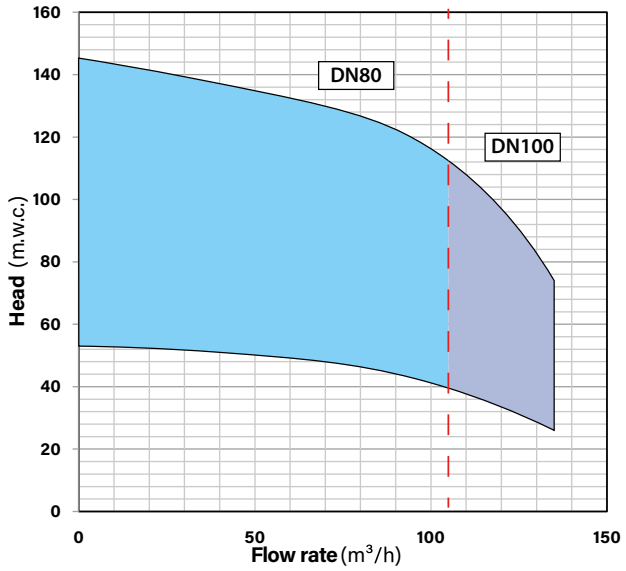

PRO ELECTRIC

GSM

VERTICAL PUMP

Submersible axial flow vertical shaft pump, pump body connected to the control unit through the line shaft, fitted with an anti-rotation device to prevent machine counter-rotation when emptying the line shaft.

PUMP

- Control unit — Grey cast iron
- Pump body — Grey cast iron
- Impellers and Diffusers — Grey cast iron
- Shaft — Stainless steel
- Transmission sleeve — Stainless steel
- Tapered bush — Stainless steel

LINE SHAFT:

- Rod support — Grey cast iron
- Transmission rod — Stainless steel
- Pipe — Stainless steel

Note: Line shaft up to a maximum length of 4 m (longer lengths on request)

MOTOR

Three-phase asynchronous closed externally self-ventilated with cage rotor. Greater power than the maximum absorbed power at the peak of the pump power curve **UNI EN 12845:2020 10.1**

VERTICALFIRE PUMPS VTP 80F PERFORMANCE

Diesel Version page 182

Pump Model	ID Pump	Motor		Submersion		Flow Rate - m³/h							
		Electrical	Diesel										
		kW	kW	mm		0	20	40	60	80	100	120	135
VTP 80F/2C	212	18.5	25.2	487.5	H (mwc)	53	52	51	50	47	41	33	26
VTP 80F/2A	215	22	25.2	487.5		58	56	55	53	51	46	39	30
VTP 80F/4D	230	30	36.5	487.5		96	92	87	76	67	55	40	28
VTP 80F/3C	237	30	25.2	487.5		79	78	77	74	71	61	49	38
VTP 80F/3A	238	30	36.5	487.5		87	84	82	80	76	70	58	44
VTP 80F/4C	239	37	47.7	487.5		106	104	102	99	94	82	66	51
VTP 80F/4A	240	45	47.7	487.5		116	112	110	106	102	93	78	59
VTP 80F/5B	247	55	47.7	487.5		139	138	134	129	122	111	91	73
VTP 80F/5A	248	55	47.7	487.5		145	141	137	133	127	116	97	74

Values with a GREY background indicate NPSH-R values > 8m.
For installations in HHS-HHP systems, contact our technical department. Nominal hydraulic characteristics of flow rate and head at the pump inlet, with performance tolerances according to UNI EN ISO 9906:2012 Grade 3B

VERTICALFIRE WITH ELECTRIC PUMP VTP 80F
UNI EN 12845

VERTICAL PUMP

HEADER

KEY

NDD	Nom. Delivery Diameter
NCD	Nom. Column Diameter

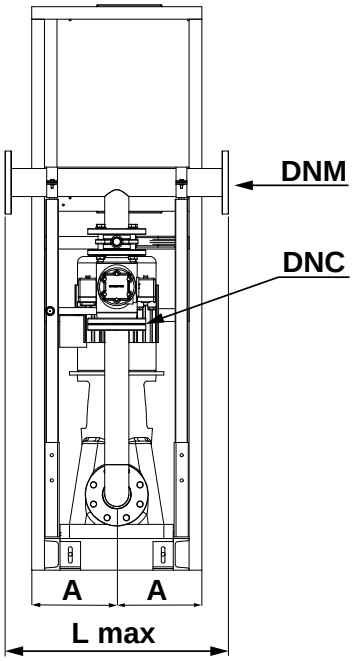

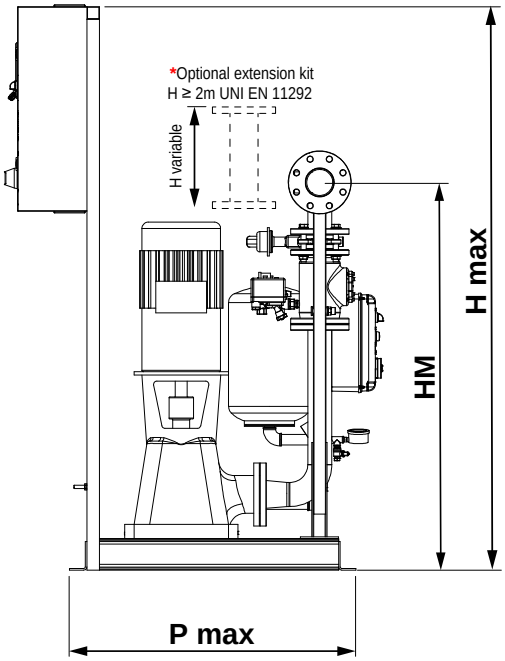

* H rise optional extension ≥ 2m

DIMENSIONS AND WEIGHTS OF VERTICALFIRE WITH ELECTRIC PUMPS VTP 80F

Jockey pumps on page 39

Q max	PRODUCT CODE VTP 80F				Power Pump	DNM	HM	A	H max	L max	P max	Weight
m³/h	COMP..	Pump ID	DNC		kW Electrical	Ø	mm	mm	mm	mm	mm	kg
≤ 105	GV0E0	212	080	E	18.5	100	1341*	270	1790	540	1240	650
	GV0E0	215	080	E	22	100	1341*	270	1790	540	1240	750
	GV0E0	230 - 237 - 238	080	E	30	100	1341*	275	1790	550	1390	840
	GV0E0	239	080	E	37	100	1382*	275	1790	550	1390	930
	GV0E0	240	080	E	45	100	1453*	305	1790	610	1590	1005
	GV0E0	247 - 248	080	E	55	100	1437*	295	1790	590	1635	1045
> 105	GV0E0	212	100	F	18.5	125	1466*	270	1790	540	1240	700
	GV0E0	215	100	F	22	125	1466*	270	1790	540	1240	800
	GV0E0	230 - 237 - 238	100	F	30	125	1466*	275	1790	550	1390	890
	GV0E0	239	100	F	37	125	1506*	275	1790	550	1390	970
	GV0E0	240	100	F	45	125	1541*	305	1790	610	1590	1100
	GV0E0	247 - 248	100	F	55	125	1526*	295	1790	590	1635	1145

Fire-fighting units catalogue - Edition: September-2021

VERTICALFIRE WITH ELECTRIC PUMP VTP 80G
UNI EN 12845

PRO ELECTRIC

GSM

PERFORMANCE RANGE

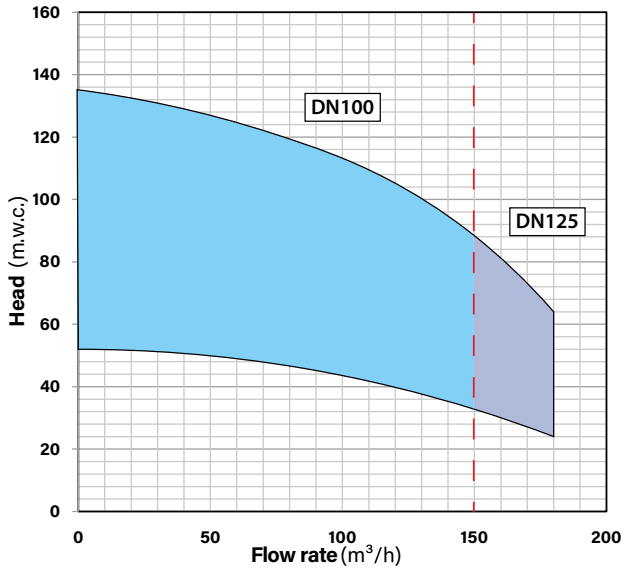

VERTICAL PUMP

Submersible axial flow vertical shaft pump, pump body connected to the control unit through the line shaft, fitted with an anti-rotation device to prevent machine counter-rotation when emptying the line shaft.

PUMP

- Control unit — Grey cast iron
- Pump body — Grey cast iron
- Impellers and Diffusers — Grey cast iron
- Shaft — Stainless steel
- Transmission sleeve — Stainless steel
- Tapered bush — Stainless steel

LINE SHAFT:

- Rod support — Grey cast iron
- Transmission rod — Stainless steel
- Pipe — Stainless steel

Note: Line shaft up to a maximum length of 4 m (longer lengths on request)

MOTOR

Three-phase asynchronous closed externally self-ventilated with cage rotor. Greater power than the maximum absorbed power at the peak of the pump power curve **UNI EN 12845:2020 10.1**

VERTICALFIRE PUMPS VTP 80G PERFORMANCE

Diesel Version page 184

Pump Model	ID Pump	Motor		Submersion		Flow Rate - m³/h									
		Electrical	Diesel												
		kW	kW	mm		0	20	40	60	80	100	120	140	160	180
VTP 80G/2B	250	22	25.2	487.5	H (mwc)	52	51	50	48	46	44	40	35	30	24
VTP 80G/3D	255	50	25.2	487.5		71	69	67	65	62	58	52	46	37	30
VTP 80G/3C	257	30	25.2	487.5		77	74	72	70	67	63	58	51	43	34
VTP 80G/3A	260	37	36.5	487.5		81	79	77	74	71	68	63	56	47	38
VTP 80G/3B	265	30	36.5	487.5		79	77	74	72	70	67	62	54	46	35
VTP 80G/4B	268	37	47.7	487.5		105	102	99	96	92	87	80	70	60	47
VTP 80G/5D	285	45	47.7	487.5		119	115	112	108	103	96	87	76	61	48
VTP 80G/5B	290	55	47.7	487.5		131	128	124	120	115	109	100	88	75	59
VTP 80G/5A	295	55	47.7	487.5		135	132	128	124	119	114	105	94	79	64

Values with a GREY background indicate NPSH-R values > 8m.
For installations in HHS-HHP systems, contact our technical department. Nominal hydraulic characteristics of flow rate and head at the pump inlet, with performance tolerances according to UNI EN ISO 9906:2012 Grade 3B

VERTICALFIRE WITH ELECTRIC PUMP VTP 80G
UNI EN 12845

VERTICAL PUMP

HEADER

KEY

NDD	Nom. Delivery Diameter
NCD	Nom. Column Diameter

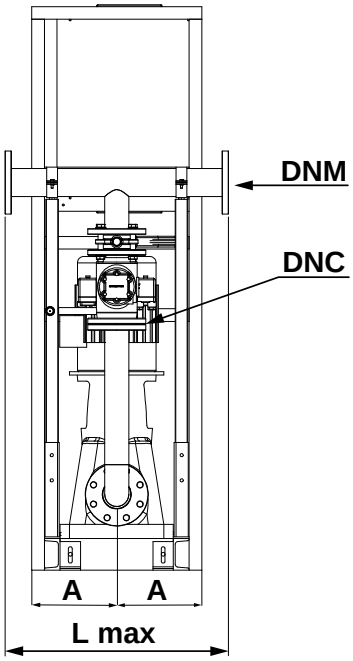

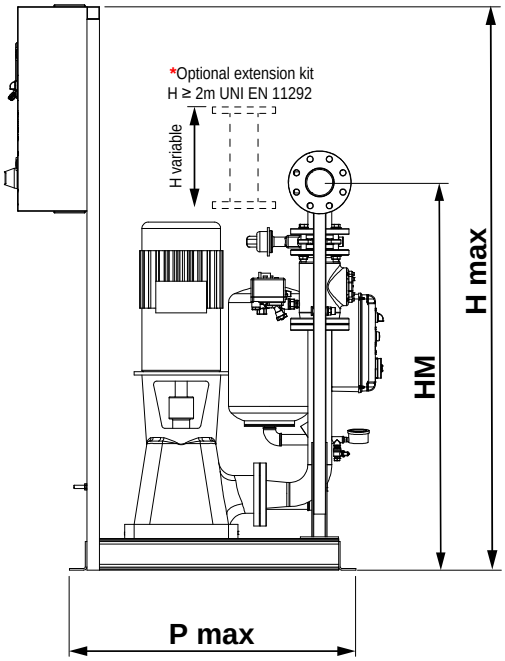

* H rise optional extension ≥ 2m

DIMENSIONS AND WEIGHTS OF VERTICALFIRE WITH ELECTRIC PUMPS VTP 80G

Jockey pumps on page 39

Q max	PRODUCT CODE VTP 80G				Power Pump	DNM	HM	A	H max	L max	P max	Weight
m³/h	COMP..	Pump ID	DNC		kW Electrical	Ø	mm	mm	mm	mm	mm	kg
≤ 150	GV0E0	250	100	F	22	125	1501*	270	1790	540	1240	807
	GV0E0	255 - 257 - 265	100	F	30	125	1501*	275	1790	550	1390	904
	GV0E0	260 - 268	100	F	37	125	1501*	275	1790	550	1390	923
	GV0E0	285	100	F	45	125	1541*	305	1790	610	1590	1214
	GV0E0	290 - 295	100	F	55	125	1541*	295	1790	590	1635	1340
> 150	GV0E0	250	125	G	22	150	1785*	270	1790	540	1240	857
	GV0E0	255 - 257 - 265	125	G	30	150	1815*	275	1790	550	1390	954
	GV0E0	260 - 268	125	G	37	150	1815*	275	1790	550	1390	974
	GV0E0	285	125	G	45	150	1855*	305	1790	610	1590	1254
	GV0E0	290 - 295	125	G	55	150	1955*	295	1790	590	1635	1380

The technical data are not binding and can be modified without prior notice | The images are indicative and not binding

VERTICALFIRE WITH ELECTRIC PUMP VTP 90A
UNI EN 12845

PRO ELECTRIC

GSM

PERFORMANCE RANGE

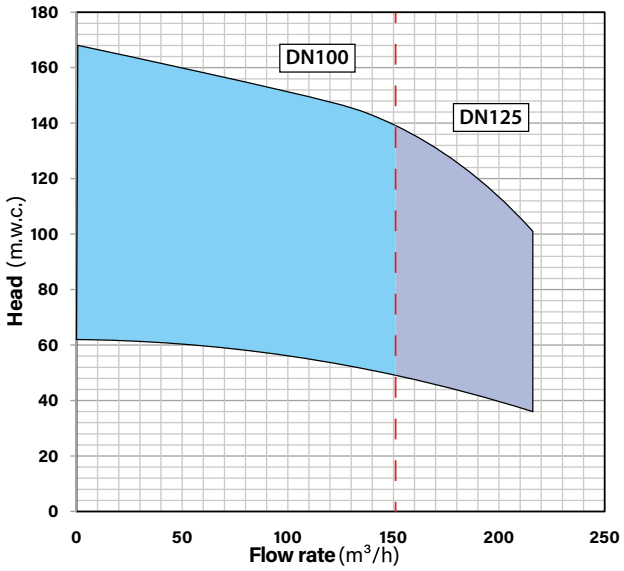

VERTICAL PUMP

Submersible axial flow vertical shaft pump, pump body connected to the control unit through the line shaft, fitted with an anti-rotation device to prevent machine counter-rotation when emptying the line shaft.

PUMP

- Control unit — Grey cast iron
- Pump body — Grey cast iron
- Impellers and Diffusers — Grey cast iron
- Shaft — Stainless steel
- Transmission sleeve — Stainless steel
- Tapered bush — Stainless steel

LINE SHAFT:

- Rod support — Grey cast iron
- Transmission rod — Stainless steel
- Pipe — Stainless steel

Note: Line shaft up to a maximum length of 4 m (longer lengths on request)

MOTOR

Three-phase asynchronous closed externally self-ventilated with cage rotor. Greater power than the maximum absorbed power at the peak of the pump power curve **UNI EN 12845:2020 10.1**

VERTICALFIRE PUMPS VTP 90A PERFORMANCE

Diesel Version page 186

Pump Model	ID Pump	Motor		Submersion		Flow Rate - m³/h												
		Electrical	Diesel															
		kW	kW	mm		0	90	100	108	116	126	130	144	152	162	180	198	216
VTP 90A/2B	310	30	36.5	585	H (mwc)	62	56	56	55	54	53	52	50	49	47	44	40	36
VTP 90A/2A	315	37	47.7	585		67	61	60	60	60	59	58	56	55	53	50	46	40
VTP 90A/3C	320	45	47.7	585		87	78	77	76	75	74	72	69	67	63	58	52	47
VTP 90A/3B	325	45	47.7	585		93	84	83	82	81	79	77	75	73	71	66	60	54
VTP 90A/3A	330	55	66	585		101	92	91	90	89	88	87	84	83	80	75	69	61
VTP 90A/4C	335	55	66	585		116	104	103	101	100	98	96	92	89	84	77	70	62
VTP 90A/4B	340	75	66	585		124	112	111	110	108	106	103	100	98	94	88	80	72
VTP 90A/4AB	345	75	66	585		129	117	116	115	114	111	109	107	104	100	94	86	76
VTP 90A/5BC	350	75	108	585		145	135	134	132	130	127	124	121	117	111	103	94	84
VTP 90A/5AB	355	90	108	585		154	147	145	144	142	139	137	133	130	125	118	108	96
VTP 90A/5A	360	90	108	585		168	153	151	150	149	147	145	141	138	133	125	115	101

Values with a GREY background indicate NPSH-R values > 8m.
For installations in HHS-HHP systems, contact our technical department. Nominal hydraulic characteristics of flow rate and head at the pump inlet, with performance tolerances according to UNI EN ISO 9906:2012 Grade 3B

VERTICALFIRE WITH ELECTRIC PUMP VTP 90A
UNI EN 12845

VERTICAL PUMP

HEADER

KEY

NDD	Nom. Delivery Diameter
NCD	Nom. Column Diameter

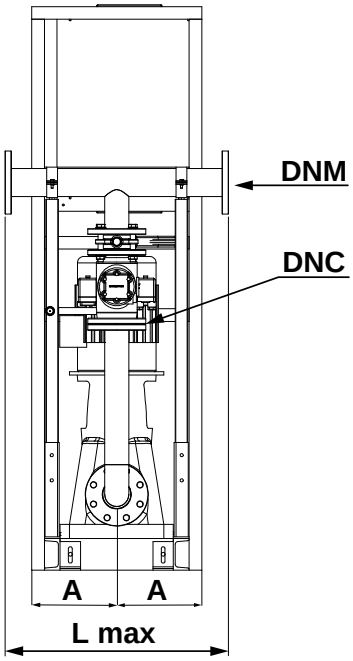

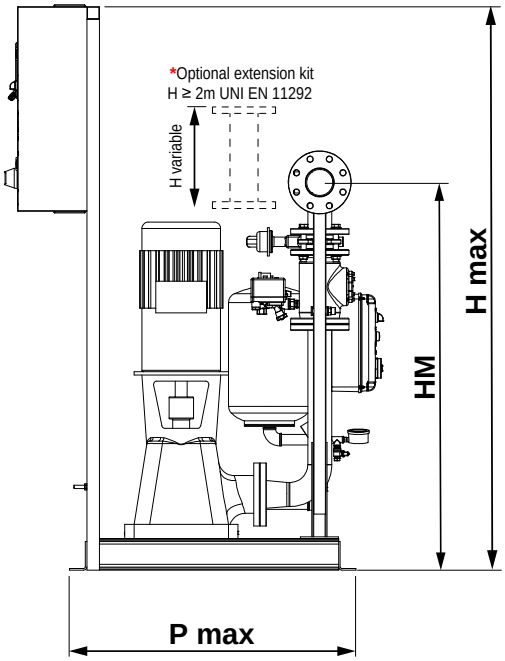

* H rise optional extension ≥ 2m

DIMENSIONS AND WEIGHTS OF VERTICALFIRE WITH ELECTRIC PUMPS VTP 90A

Jockey pumps on page 39

Q max	PRODUCT CODE VTP 90A				Power Pump	DNM	HM	A	H max	L max	P max	Weight
m³/h	COMP..	Pump ID	DNC		kW Electrical	Ø	mm	mm	mm	mm	mm	kg
≤ 150	GV0E0	310	100	F	30	125	1496*	275	1790	550	1390	937
	GV0E0	315	100	F	37	125	1496*	275	1790	550	1390	1209
	GV0E0	320 - 325	100	F	45	125	1536*	305	1790	610	1590	1340
	GV0E0	330 - 335	100	F	55	125	1536*	295	1790	590	1635	1525
	GV0E0	340 - 345 - 350	100	F	75	125	1536*	295	1790	590	1635	1808
	GV0E0	355 - 360	100	F	90	125	1536*	295	1790	590	1635	1950
> 150	GV0E0	310	125	G	30	150	1925*	275	1790	550	1390	987
	GV0E0	315	125	G	37	150	1925*	275	1790	550	1390	1259
	GV0E0	320 - 325	125	G	45	150	1965*	305	1790	610	1590	1390
	GV0E0	330 - 335	125	G	55	150	1965*	295	1790	590	1635	1575
	GV0E0	340 - 345 - 350	125	G	75	150	1965*	295	1790	590	1635	1850
	GV0E0	355 - 360	125	G	90	150	1965*	295	1790	590	1635	2000

Fire-fighting units catalogue - Edition: September-2021

VERTICALFIRE WITH ELECTRIC PUMP VTP 100A
UNI EN 12845

PRO ELECTRIC

GSM

PERFORMANCE RANGE

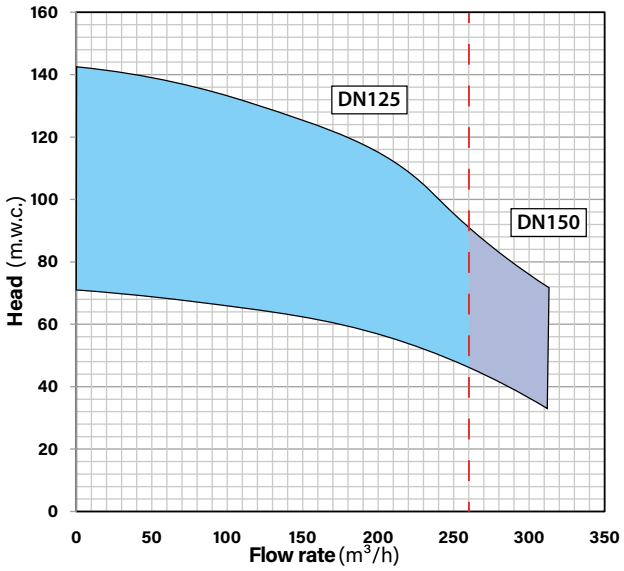

VERTICAL PUMP

Submersible axial flow vertical shaft pump, pump body connected to the control unit through the line shaft, fitted with an anti-rotation device to prevent machine counter-rotation when emptying the line shaft.

PUMP

- Control unit — Grey cast iron
- Pump body — Grey cast iron
- Impellers and Diffusers — Grey cast iron
- Shaft — Stainless steel
- Transmission sleeve — Stainless steel
- Tapered bush — Stainless steel

LINE SHAFT:

- Rod support — Grey cast iron
- Transmission rod — Stainless steel
- Pipe — Stainless steel

Note: Line shaft up to a maximum length of 4 m (longer lengths on request)

MOTOR

Three-phase asynchronous closed externally self-ventilated with cage rotor. Greater power than the maximum absorbed power at the peak of the pump power curve **UNI EN 12845:2020 10.1**

VERTICALFIRE PUMPS VTP 100A PERFORMANCE

Diesel Version page 188

Pump Model	ID Pump	Motor		Submersion		Flow Rate - m³/h												
		Electrical	Diesel															
		kW	kW	mm		0	126	144	162	180	198	216	234	252	270	288	306	312
VTP 100A/2D	365	45	47.7	585	H (mwc)	71	65	64	62	60	57	54	52	48	43	40	35	33
VTP 100A/2C	370	55	66	585		76	70	68	66	64	62	60	56	52	48	44	40	38
VTP 100A/2B	375	55	66	585		82	74	73	71	69	66	64	61	57	53	48	44	43
VTP 100A/2A	380	75	66	585		86	78	76	74	73	71	68	65	62	58	53	50	48
VTP 100A/3D	385	75	66	585		107	98	96	93	89	86	81	77	71	65	59	53	50
VTP 100A/3C	390	75	108	585		114	105	102	100	96	93	89	84	78	72	66	60	58
VTP 100A/3B	395	90	108	585		124	111	109	107	104	100	96	91	85	80	72	66	65
VTP 100A/3A	400	90	108	585		130	117	114	111	109	106	102	97	92	86	80	74	72
VTP 100A/4D	405	90	108	585		142	130	128	124	119	114	108	103	95	87	79	70	66

Values with a GREY background indicate NPSH-R values > 8m.
For installations in HHS-HHP systems, contact our technical department. Nominal hydraulic characteristics of flow rate and head at the pump inlet, with performance tolerances according to UNI EN ISO 9906:2012 Grade 3B

VERTICALFIRE WITH ELECTRIC PUMP VTP 100A
UNI EN 12845

VERTICAL PUMP

HEADER

KEY

NDD	Nom. Delivery Diameter
NCD	Nom. Column Diameter

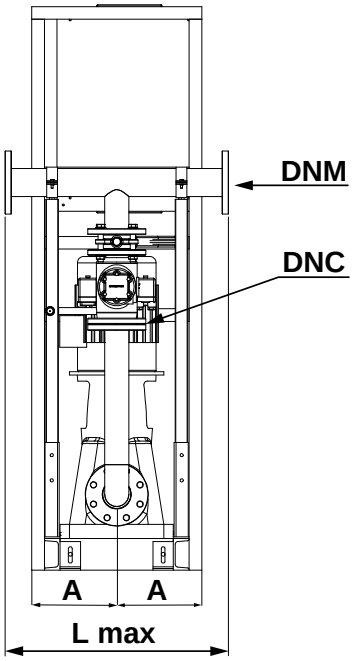

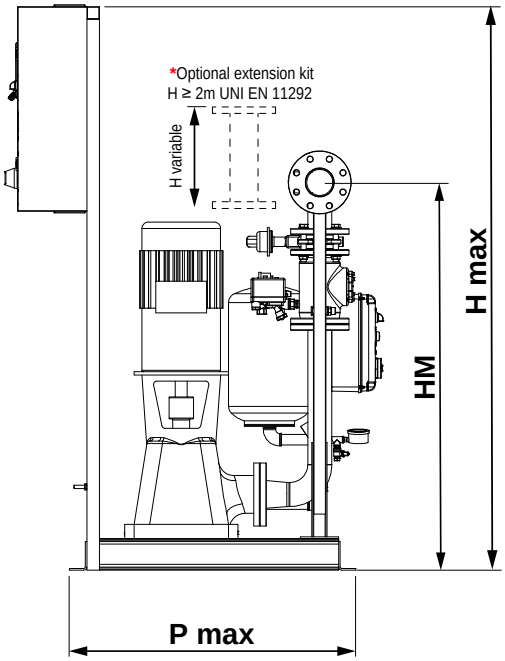

* H rise optional extension ≥ 2m

DIMENSIONS AND WEIGHTS OF VERTICALFIRE WITH ELECTRIC PUMPS VTP 100A

Jockey pumps on page 39

Q max	PRODUCT CODE VTP 100A				Power Pump	DNM	HM	A	H max	L max	P max	Weight
m³/h	COMP..	Pump ID	DNC		kW Electrical	Ø	mm	mm	mm	mm	mm	kg
≤ 260	GV0E0	365	125	G	45	150	1965*	305	1790	610	1590	1498
	GV0E0	370 - 375	125	G	55	150	1965*	295	1790	590	1635	1702
	GV0E0	380 - 385 - 390	125	G	75	150	1965*	295	1790	590	1635	1870
	GV0E0	395 - 400 - 405	125	G	90	150	1955*	295	1790	590	1635	2000
> 260	GV0E0	365	150	H	22	200	1871*	270	1790	540	1240	1540
	GV0E0	370 - 375	150	H	30	200	1871*	275	1790	550	1390	1740
	GV0E0	380 - 385 - 390	150	H	37	200	1861*	275	1790	550	1390	1920
	GV0E0	395 - 400 - 405	150	H	45	200	1881*	305	1790	610	1590	2040

Fire-fighting units catalogue - Edition: September-2021

VERTICALFIRE WITH ELECTRIC PUMP VTP 100B
UNI EN 12845

PRO ELECTRIC

GSM

PERFORMANCE RANGE

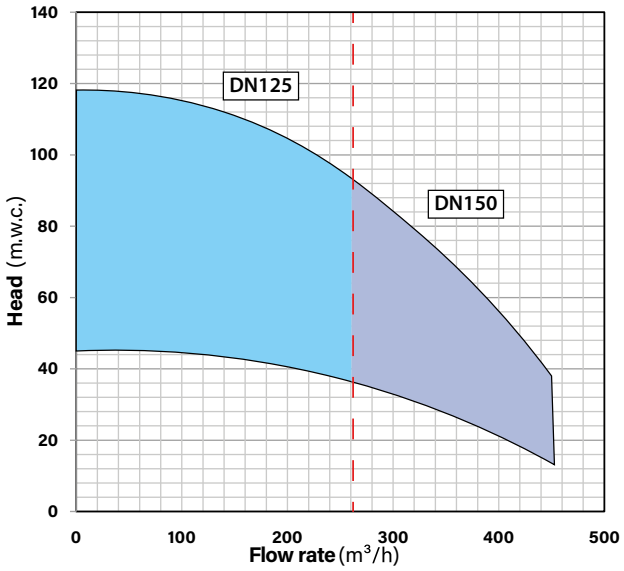

VERTICAL PUMP

Submersible axial flow vertical shaft pump, pump body connected to the control unit through the line shaft, fitted with an anti-rotation device to prevent machine counter-rotation when emptying the line shaft.

PUMP

- Control unit — Grey cast iron
- Pump body — Grey cast iron
- Impellers and Diffusers — Grey cast iron
- Shaft — Stainless steel
- Transmission sleeve — Stainless steel
- Tapered bush — Stainless steel

LINE SHAFT:

- Rod support — Grey cast iron
- Transmission rod — Stainless steel
- Pipe — Stainless steel

Note: Line shaft up to a maximum length of 4 m (longer lengths on request)

MOTOR

Three-phase asynchronous closed externally self-ventilated with cage rotor. Greater power than the maximum absorbed power at the peak of the pump power curve **UNI EN 12845:2020 10.1**

VERTICALFIRE PUMPS VTP 100B PERFORMANCE

Diesel Version page 190

Pump Model	ID Pump	Motor		Submersion		Flow Rate - m³/h												
		Electrical	Diesel															
		kW	kW	mm		0	100	150	175	200	250	275	300	325	350	375	400	450
VTP 100B/1A	406	45	47.7	585	H (mwc)	45	44	43	42	40	38	36	34	32	30	28	25	18
VTP 100B/2CD	407	55	66	585		70	68	64	62	58	53	49	44	38	33	25	19	14
VTP 100B/2BC	408	75	66	585		76	74	71	68	66	58	56	51	45	40	34	25	16
VTP 100B/2A	409	90	108	585		90	89	86	84	82	76	74	69	65	61	56	51	38
VTP 100B/3BC	410	90	108	585		117	115	109	107	102	93	87	80	73	65	58	45	20
VTP 100B/3B	415	110	108	585		118	115	111	108	105	96	88	85	76	72	62	56	30

Values with a GREY background indicate NPSH-R values > 8m.
For installations in HHS-HHP systems, contact our technical department. Nominal hydraulic characteristics of flow rate and head at the pump inlet, with performance tolerances according to UNI EN ISO 9906:2012 Grade 3B

VERTICALFIRE WITH ELECTRIC PUMP VTP 100B
UNI EN 12845

VERTICAL PUMP

HEADER

KEY

NDD	Nom. Delivery Diameter
NCD	Nom. Column Diameter

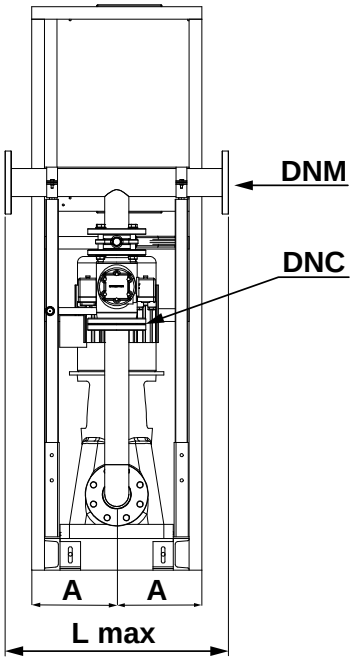

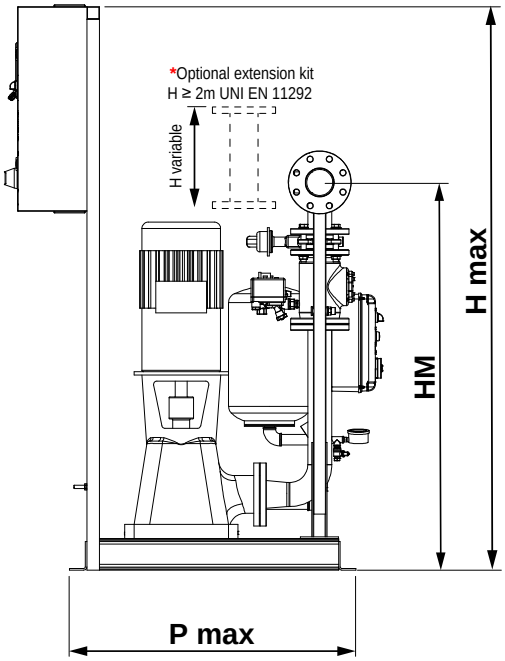

* H rise optional extension ≥ 2m

DIMENSIONS AND WEIGHTS OF VERTICALFIRE WITH ELECTRIC PUMPS VTP 100B

Jockey pumps on page 39

Q max	PRODUCT CODE VTP 100B				Power Pump	DNM	HM	A	H max	L max	P max	Weight
m³/h	COMP..	Pump ID	DNC		kW Electrical	Ø	mm	mm	mm	mm	mm	kg
≤ 260	GV0E0	406	125	G	45	150	1965*	305	1790	610	1590	1395
	GV0E0	407	125	G	55	150	1955*	295	1790	590	1635	1102
	GV0E0	408	125	G	75	150	1955*	295	1790	590	1635	1380
	GV0E0	409 - 410	125	G	90	150	1955*	295	1790	590	1635	1490
	GV0E0	415	125	G	110	150	1985*	295	1790	590	1635	1580
> 260	GV0E0	406	150	H	45	200	1891*	305	1790	610	1590	1430
	GV0E0	407	150	H	55	200	1881*	295	1790	590	1635	1168
	GV0E0	408	150	H	75	200	1881*	295	1790	590	1635	1425
	GV0E0	409 - 410	150	H	90	200	1881*	295	1790	590	1635	1528
	GV0E0	415	150	H	110	200	1911*	295	1790	590	1635	1130

Fire-fighting units catalogue - Edition: September-2021

FAQ

UNIT OPERATION
HOW OFTEN MUST IT BE CHECKED AND BY WHOM ?

UNI EN 12845 dedicates Chapter 20 to the operation and maintenance of sprinkler systems. You will find the procedures and the frequency with which they must be carried out, for the pumping units to work. The most frequent operations (weekly and monthly) are certainly part of the "supervision" and are normally carried out by the system operators. Those less frequent (quarterly, half-yearly, etc.), can also be carried out by external companies, which are entrusted with the task of implementing these procedures.

ALARM PANEL
WHERE MUST IT BE PLACED ?

UNI EN 12845, Appendix I, covers the alarms that are to be transmitted outside the fire-fighting unit. Point 1 states that the alarms must be transmitted to a permanently manned station, inside or outside the building. Therefore, the panel must be installed where an operator is always present, or the alarm signals will be transmitted via cable or wireless, to at least one person, known to be responsible for monitoring the alarms.

MORE INFORMATION
WWW.IDRO-ELETTRICA.IT

VERTICALFIRE DIESEL

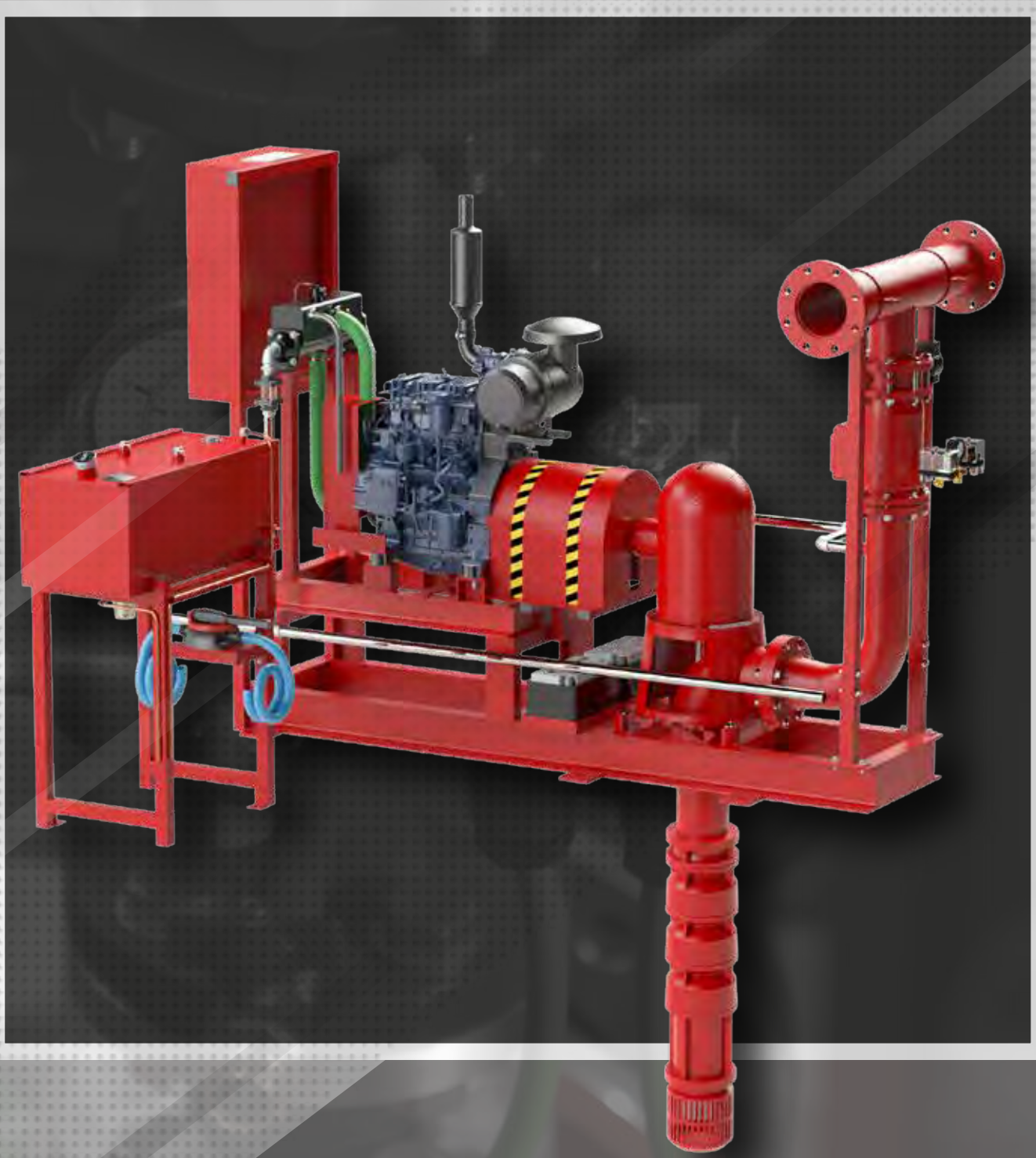

UNI EN 12845 - UNI EN 10779

VERTICALFIRE DIESEL

Fire-fighting pressurisation units UNI EN 12845
With submersible axial flow vertical shaft pumps

MAIN FEATURES

The VERTICALFIRE series includes units with:

Flow rate Q	up to	450	m^3/h
Head H	up to	168	mwc
Electric pump	up to	110	kW
Diesel pump	up to	108	kW in NA curve

Every module is autonomous and reflects the definition of a pumping unit (PUMP-SET) as described in **UNI 11292:2019 3.15.**
Every pumping unit of the DIESEL VERTICALFIRE series therefore includes:

- Main submersible axial flow vertical shaft pumps (VTP), with connection heads for electric motors **UNI EN 12845 10.1**
- Diesel engines with power that exceeds that required by the pump at the peak of the power curve **UNI EN 1284510.1**; with power expressed in NA curve (continuous overloadable power 10% DIN 6271 - ISO 3046-1) as required by **UNI EN 12845 10.9.1**
- Cardan flexible coupling **UNI EN 12845 10.1**
- Base in metal profiles
- Electrical panel with Epro intelligent control unit
- Hydraulic accessories external to the pump-set with diameters sized according to U**NI EN 12845 13.2.3**
- Electric accessories external to the pump-set

Every pumping unit is designed to be independently secured to the foundation/base floor **UNI 11292:2019 6.6**
In this case, the reference hydraulic diagram is that of the underground storage tank with the pump compartment placed immediately above it. Choosing to use this type of machine to set up the units guarantees that the main pumps are always in positive suction head. Thereby eliminating any issue related to pump priming and accessibility of the components of the pressurisation unit

Hydraulic diagram page 171
List of components page 172
Accessories page 215

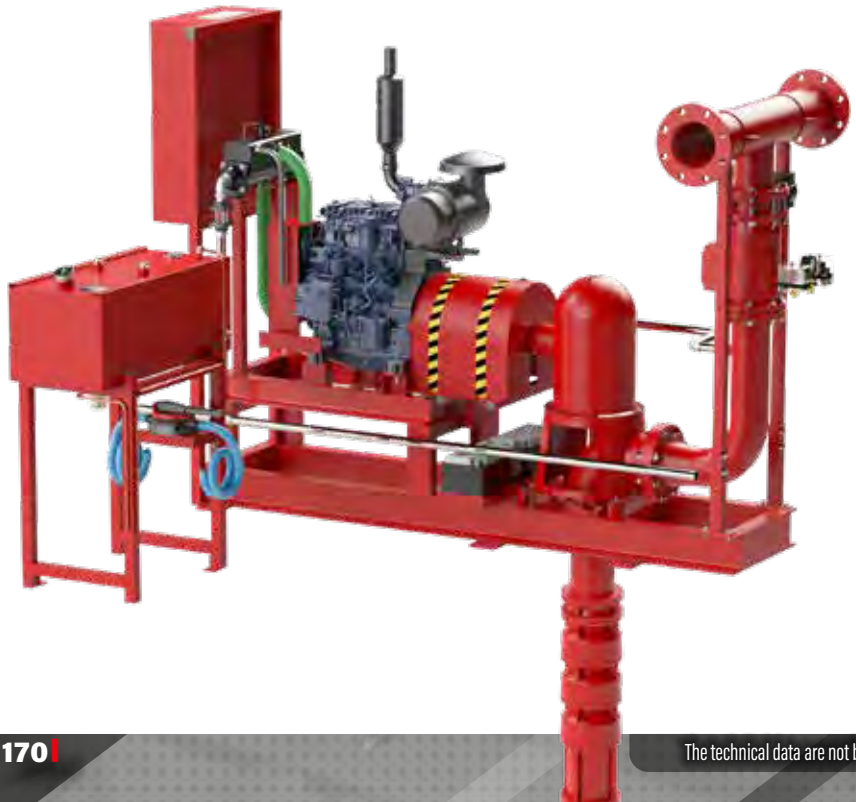

The technical data are not binding and can be modified without prior notice | The images are indicative and not binding

VERTICALFIRE DIESEL

Fire-fighting pressurisation units according to UNI EN 12845
With submersible axial flow vertical shaft motor pumps

HYDRAULIC DIAGRAM

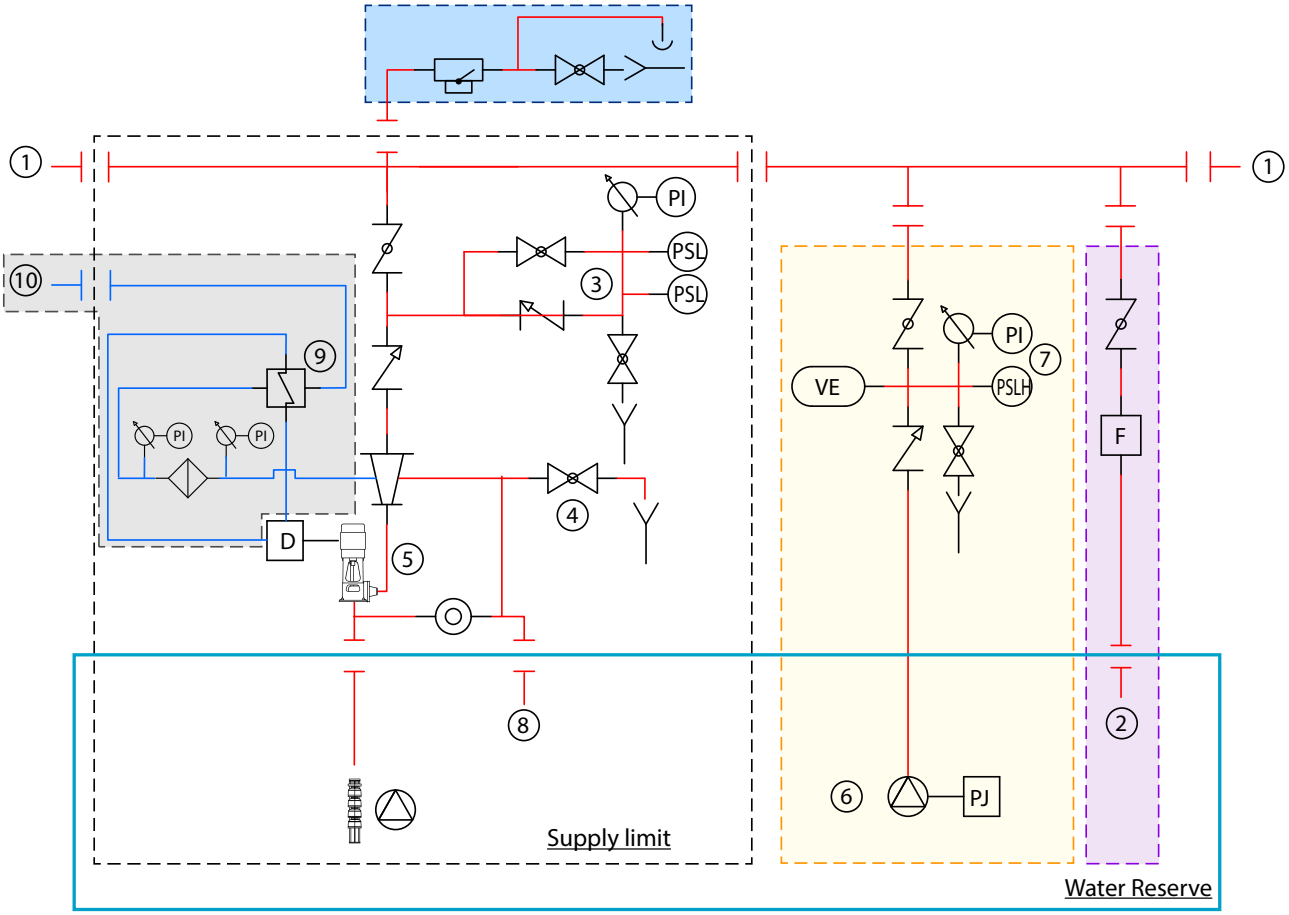

1. Delivery to the system
2. Return in flow meter tank
3. Pressure switch test circuit
4. Drain valve (leak test)
5. Main pump
6. Jockey pump
7. Jockey pump pressure switch unit
8. Priming tank water supply
9. Water-to-water exchanger circuit
10. Return in heat exchanger tank

KEY

Instruments
Piping
Water-to-Water Exchanger Kit Piping

Optional supply

Flow Meter Kit
Sprinkler circuit kit
Jockey pump kit
Exchanger circuit only >17,5 kW

	Pump		Normally open ball valve	PSLH	Jockey pump start/stop pressure switch
E	Main pump electric motor		Normally closed ball valve	PSL	Pump start pressure switch
D	Main pump diesel engine		Throttle valve with handwheel	V	Vacuum gauge
PJ	Jockey pump electrical motor		Throttle valve with lever		Water Reserve Tank
	Eccentric cone		Clapet check valve	A	Priming Tank 500 ℓ
	Expansion		Safety valve		EC UNI EN 12259-5 flow switch
VE	Preloaded expansion vessel		Gate valve with handwheel		Pendent sprinkler head 1/2 k=80
PI	Pressure gauge	F	Flowmeter	IF	Flow indicator
	Diaphragm		Open drain		Heat exchanger
	"Y' filter		Pressure reducer		Filling float

Fire-fighting units catalogue - Edition: September-2021

VERTICALFIRE DIESEL
Fire-fighting pressurisation units according to UNI EN 12845
With submersible axial flow vertical shaft motor pumps

MAIN COMPONENTS

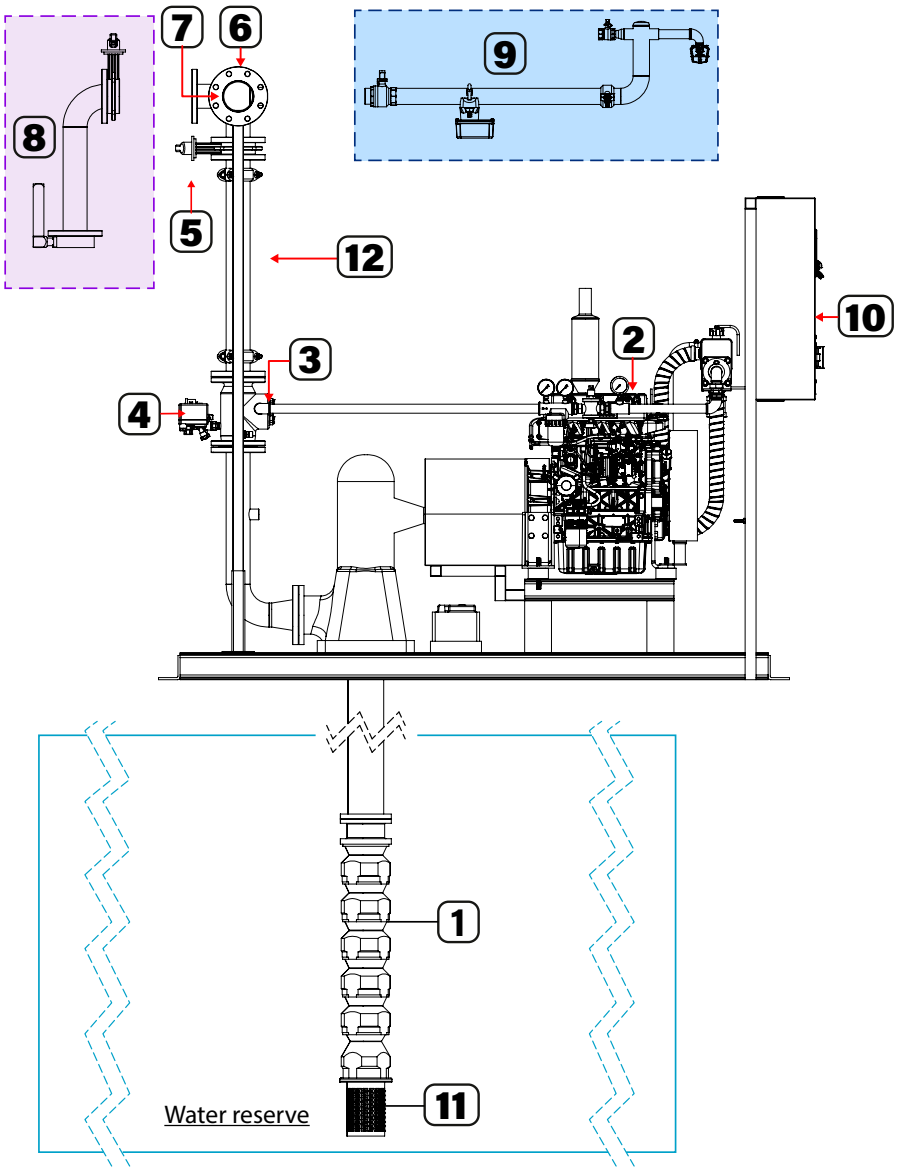

1	Main pump
2	Main pump diesel engine
3	Inspectable check valve
4	Control and test circuit
5	Shut-off valve
6	Delivery manifold
7	Flanged stub pipe for flow test circuit

8	Flowmeter kit complete with upstream and downstream pipe sections L> 5 diam.
9	2″ Sprinkler Kit complete with Flow switch in accordance with UNI EN 12259-5
10	Electric Control Unit
11	Intake filter
12	Optional extension kit H ≥ 2 m UNI EN 11292

Fire-fighting units catalogue - Edition: September-2021

The technical data are not binding and can be modified without prior notice | The images are indicative and not binding

VTP PUMPS
WHAT ARE THE PARTICULAR CHARACTERISTICS

The submersible axial flow pumps (vertical turbine pumps) can be used according to UNI EN 12845 10.6.1 to set up fire-fighting pumping units and particularly create positive suction head hydraulic layouts. The vertical pumps consist of a multi-impeller pump body, a vertical delivery pipe that encloses the transmission shaft (line shaft), a control unit with discharge head and a support base. The actual hydraulic part consists of impeller/diffuser stages, placed in series. The impellers are semi-axial and are individually balanced to prevent vibrations that affect the transmission shaft. The latter is supported at the ends by largely sized bearings and guided by sliding bushings placed at a centre distance of about 1.5/2 metres. The electric models are fitted with vertical type motor coupling chambers, whereas the connection between the pump and the motor in diesel models is made thanks to a bevel gearbox and a cardan joint.

VTP PUMPS
WHAT IS MEANT BY BEVEL GEARBOX

In submersible axial flow pumps (vertical turbine pumps), the transmission shaft is vertical. When a diesel engine must drive the pump, the rotation shaft must be horizontal. Therefore, for the pump shaft to be able to move, a component must be placed between the two shafts: the so-called "bevel gearbox", which generates a 90° deviation of the direction of motion and allows the motor shaft to be used, which rotates in a horizontal plane, to drive a pump, the rotation shaft of which instead forms part of a vertical plane.
The bevel gearbox has a cast iron structure and contains bronze bevel gears (crown/pinion) that allow the motion generated by the diesel engine to be deviated 90°. This is possible thanks to high resistance bearings and everything being lubricated with oil that is pressurised by an internal screw pump. The connection between the diesel engine and the bevel gearbox is made thanks to a cardan joint so as to minimise the vibrations transmitted from the motor to the bevel gear.

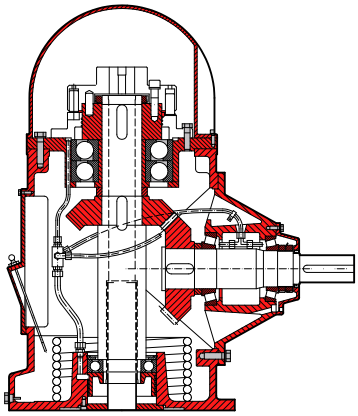

MORE INFORMATION
WWW.IDRO-ELETTRICA.IT

VERTICALFIRE WITH MOTOR PUMP VTP 60E
UNI EN 12845

PERFORMANCE RANGE

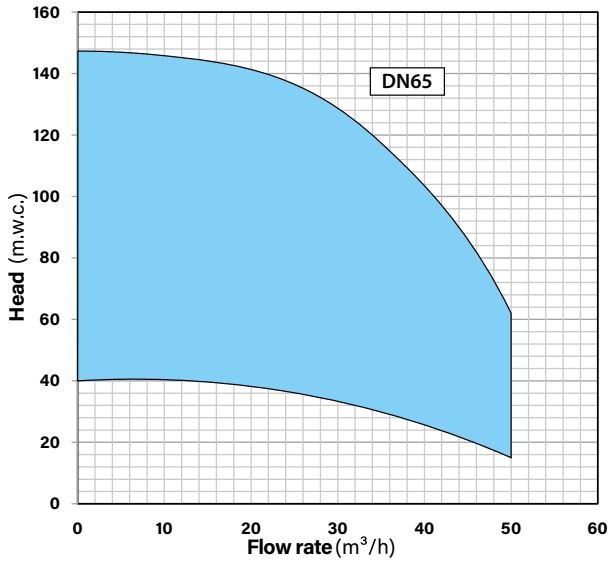

iPRO DIESEL

GSM

VERTICAL PUMP

Submersible axial flow vertical shaft pump, pump body connected to the control unit through the line shaft, fitted with an anti-rotation device to prevent machine counter-rotation when emptying the line shaft.

PUMP

- Control unit — Grey cast iron
- Pump body — Grey cast iron
- Impellers and Diffusers — Grey cast iron
- Shaft — Stainless steel
- Transmission sleeve — Stainless steel
- Tapered bush — Stainless steel

LINE SHAFT:

- Rod support — Grey cast iron
- Transmission rod — Stainless steel
- Pipe — Stainless steel

Note: Line shaft up to a maximum length of 4 m (longer lengths on request)

MOTOR

Top brand endothermic engine with direct air cooling system up to 26.5 kW and greater power outputs with a heat exchanger.
Greater power output than the maximum absorbed power at the peak of the pump power curve **UNI EN 12845:2020 10.1** NA: continuous overloadable power 10% DIN 6271 - ISO 3046-1

VERTICALFIRE PUMPS VTP 60E PERFORMANCE

Electric Version page 150

Pump Model	ID Pump	Motor		Submersion		Flow Rate - m³/h					
		Electrical	Diesel								
		kW	kW	mm		0	10	20	30	40	50
VTP 60E/3A	021	5.5	6.2	370	H (mwc)	40	40	38	35	28	17
VTP 60E/4B	022	5.5	6.2	370		47	46	45	40	30	15
VTP 60E/4A	023	7.5	6.2	370		54	53	51	47	38	22
VTP 60E/5B	030	7.5	7	370		59	58	56	50	38	19
VTP 60E/5A	035	11	10.5	370		67	67	64	59	47	28
VTP 60E/6B	040	7.5	10.5	370		71	70	67	60	45	22
VTP 60E/6A	045	11	10.5	370		80	80	77	70	56	34
VTP 60E/7A	047	11	10.5	370		94	93	90	82	66	39
VTP 60E/8B	048	11	10.5	370		94	93	90	80	60	30
VTP 60E/9B	055	15	12.8	370		106	104	101	90	68	33
VTP 60E/8A	060	15	12.8	370		107	106	102	94	75	45
VTP 60E/10B	065	15	12.8	370		118	116	112	100	76	37
VTP 60E/9A	068	15	17.5	370		121	120	115	105	85	50
VTP 60E/10A	070	15	17.5	370		134	133	128	117	94	56
VTP 60E/11A	080	18.5	17.5	370		147	146	141	129	103	62

Values with a GREY background indicate NPSH-R values > 8m.
For installations in HHS-HHP systems, contact our technical department. Nominal hydraulic characteristics of flow rate and head at the pump inlet, with performance tolerances according to UNI EN ISO 9906:2012 Grade 3B

VERTICALFIRE WITH MOTOR PUMP VTP 60E
UNI EN 12845

VERTICAL PUMP

BEVEL GEARBOX

COUPLING JOINT

KEY

NDD	Nom. Delivery Diameter
NCD	Nom. Column Diameter

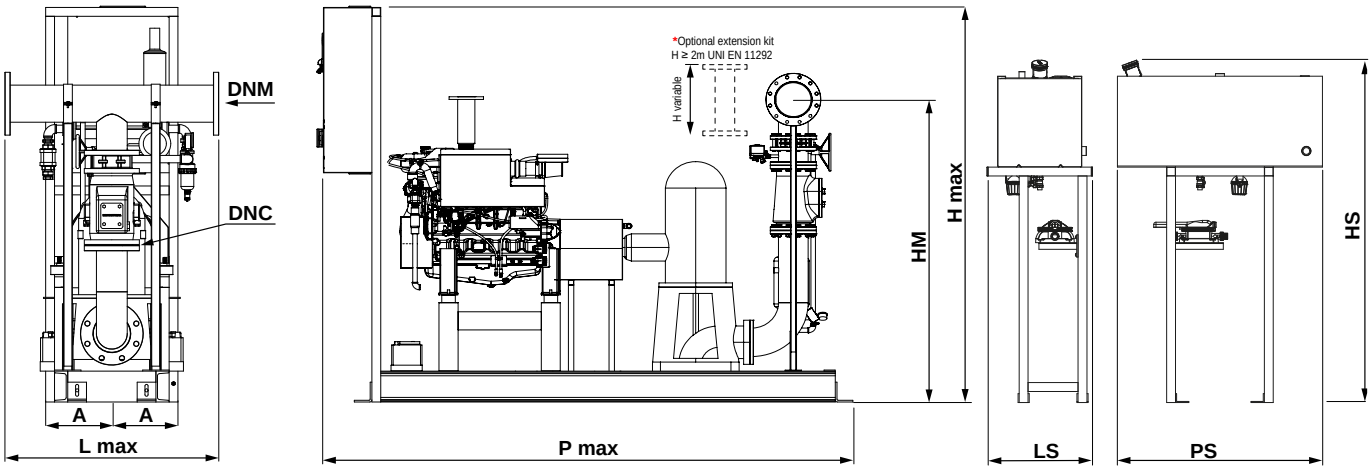

* H rise optional extension ≥ 2m

DIMENSIONS AND WEIGHTS OF VERTICALFIRE WITH ELECTRIC PUMPS VTP 60E

Jockey pumps on page 39

Q max	PRODUCT CODE VTP 60E				Power Pump	Heat exchange system	DNM	HM	A	H max	L max	P max	Weight	Tank Diesel			
m³/h	COMP..	Pump ID	DNC		kW Diesel		Ø	mm	mm	mm	mm	mm	kg	Litres	LS	PS	HS
≤ 50	GV0M0	021 - 022 - 023	065	D	6.2	Air	80	1231*	275	1560	1860	1560	500	34	451	514	1180
	GV0M0	030	065	D	7	Air	80	1231*	275	1640	1940	1640	550	34	451	514	1180
	GV0M0	035- 040- 045- 047- 048	065	D	10.5	Air	80	1231*	275	1810	2110	1810	600	34	451	514	1180
	GV0M0	055 - 060 - 065	065	D	12.8	Air	80	1231*	275	1810	2110	1810	620	34	451	514	1180
	GV0M0	068 - 070 - 080	065	D	17.5	Air	80	1231*	275	2010	2310	2010	690	34	451	514	1180

Fire-fighting units catalogue - Edition: September-2021

VERTICALFIRE WITH MOTOR PUMP VTP 60F
UNI EN 12845

iPRO DIESEL

GSM

PERFORMANCE RANGE

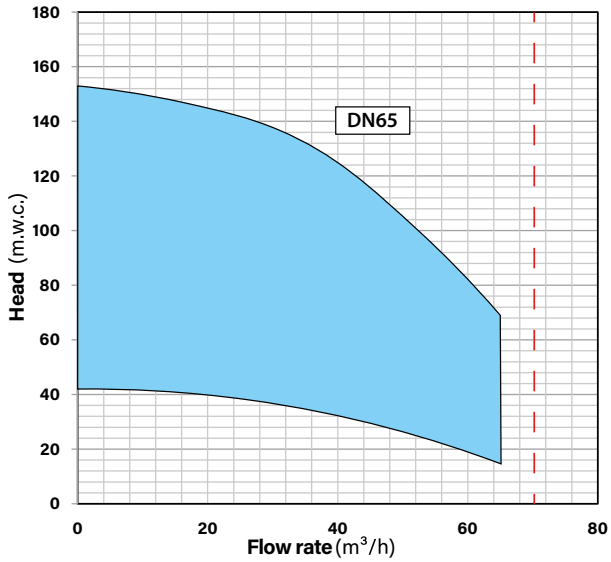

VERTICAL PUMP

Submersible axial flow vertical shaft pump, pump body connected to the control unit through the line shaft, fitted with an anti-rotation device to prevent machine counter-rotation when emptying the line shaft.

PUMP

- Control unit — Grey cast iron
- Pump body — Grey cast iron
- Impellers and Diffusers — Grey cast iron
- Shaft — Stainless steel
- Transmission sleeve — Stainless steel
- Tapered bush — Stainless steel

LINE SHAFT:

- Rod support — Grey cast iron
- Transmission rod — Stainless steel
- Pipe — Stainless steel

Note: Line shaft up to a maximum length of 4 m (longer lengths on request)

MOTOR

Top brand endothermic engine with direct air cooling system up to 26.5 kW and greater power outputs with a heat exchanger.
Greater power output than the maximum absorbed power at the peak of the pump power curve **UNI EN 12845:2020 10.1** NA: continuous overloadable power 10% DIN 6271 - ISO 3046-1

VERTICALFIRE PUMPS VTP 60F PERFORMANCE

Electric Version page 152

Pump Model	ID Pump	Motor		Submersion		Flow Rate - m³/h							
		Electrical	Diesel										
		kW	kW	mm		0	10	20	30	40	50	60	65
VTP 60F/3B	082	7.5	6.2	370	H (mwc)	42	41	39	38	34	28	20	16
VTP 60F/3A	083	7.5	7	370		47	45	44	42	40	35	27	23
VTP 60F/4B	084	7.5	10.5	370		56	54	53	50	45	37	26	21
VTP 60F/4A	085	11	10.5	370		62	61	58	56	53	46	36	31
VTP 60F/5B	087	11	10.5	370		70	68	66	63	56	46	33	26
VTP 60F/5A	090	15	12.8	370		78	76	73	70	66	58	46	39
VTP 60F/6B	092	11	12.8	370		83	81	79	75	67	56	39	31
VTP 60F/6A	095	15	17.5	370		94	91	88	84	80	70	55	46
VTP 60F/8B	100	15	17.5	370		111	108	105	100	90	74	52	42
VTP 60F/9B	105	18.5	17.5	370		125	122	118	113	101	83	59	47
VTP 60F/10B	110	18.5	25.2	370		139	136	132	125	112	93	66	52
VTP 60F/9A	120	22	25.2	370		140	136	131	126	119	104	82	69
VTP 60F/11B	121	22	25.2	370		153	149	145	138	123	102	72	57

Values with a GREY background indicate NPSH-R values > 8m.
For installations in HHS-HHP systems, contact our technical department. Nominal hydraulic characteristics of flow rate and head at the pump inlet, with performance tolerances according to UNI EN ISO 9906:2012 Grade 3B

VERTICALFIRE WITH MOTOR PUMP VTP 60F
UNI EN 12845

VERTICAL PUMP

BEVEL GEARBOX

COUPLING JOINT

KEY

NDD	Nom. Delivery Diameter
NCD	Nom. Column Diameter

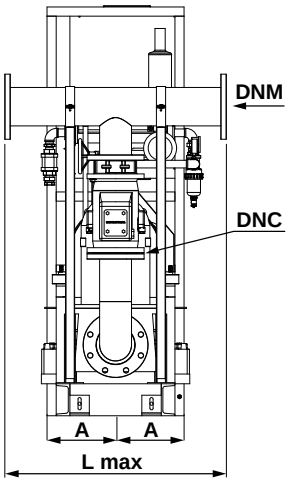

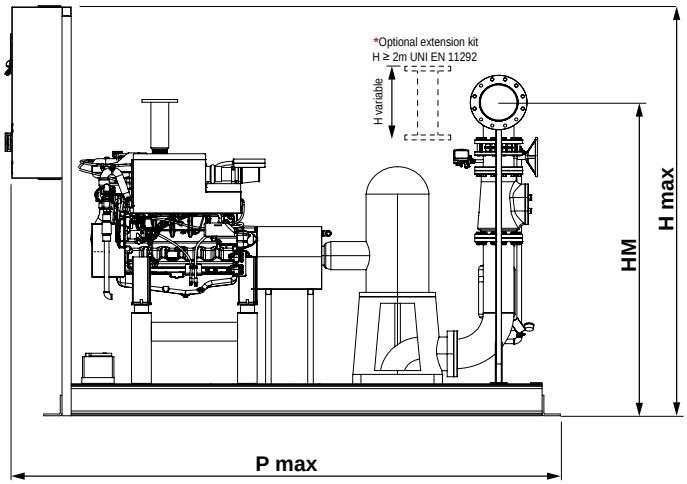

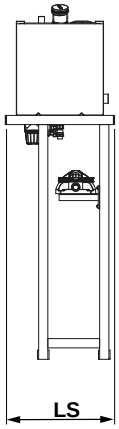

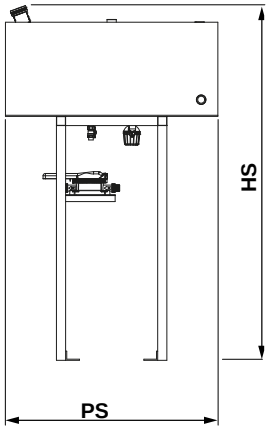

* H rise optional extension ≥ 2m

DIMENSIONS AND WEIGHTS OF VERTICALFIRE WITH ELECTRIC PUMPS VTP 60F

Jockey pumps on page 39

Q max	PRODUCT CODE VTP 60F				Power Pump	Heat exchange system	DNM	HM	A	H max	L max	P max	Weight	Tank Diesel			
m³/h	COMP..	Pump ID	DNC		kW Diesel		Ø	mm	mm	mm	mm	mm	kg	Litres	LS	PS	HS
≤ 50	GVOMO	082	065	D	6.2	Air	80	1231*	275	1560	1860	1560	500	34	451	514	1180
	GVOMO	083	065	D	7	Air	80	1231*	275	1640	1940	1640	550	34	451	514	1180
	GVOMO	084 - 085 - 087	065	D	10.5	Air	80	1231*	275	1810	2110	1810	600	34	451	514	1180
	GVOMO	090 - 092	065	D	12.8	Air	80	1231*	275	1810	2110	1810	620	34	451	514	1180
	GVOMO	095 - 098 - 100 - 105	065	D	17.5	Air	80	1231*	275	2010	2310	2010	690	34	451	514	1180
	GVOMO	110 - 120 - 121	065	D	25.2	Water/Water	80	1066*	305	2345	2645	2345	730	34	451	514	1180

Fire-fighting units catalogue - Edition: September-2021

VERTICALFIRE WITH MOTOR PUMP VTP 60G
UNI EN 12845

iPRO DIESEL

GSM

PERFORMANCE RANGE

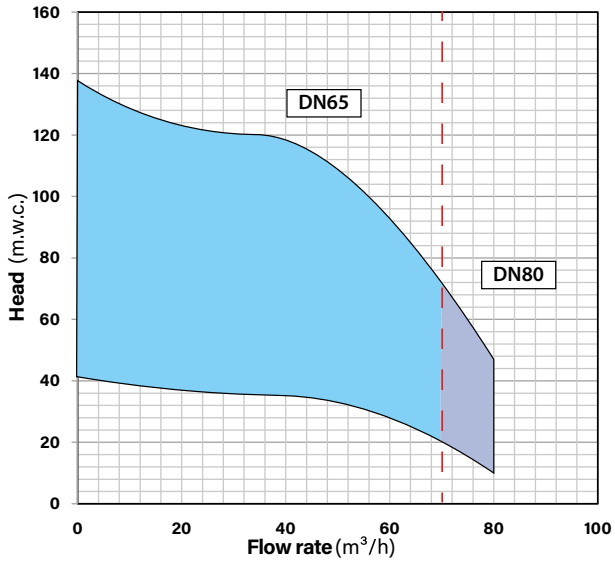

VERTICAL PUMP

Submersible axial flow vertical shaft pump, pump body connected to the control unit through the line shaft, fitted with an anti-rotation device to prevent machine counter-rotation when emptying the line shaft.

PUMP

- Control unit — Grey cast iron
- Pump body — Grey cast iron
- Impellers and Diffusers — Grey cast iron
- Shaft — Stainless steel
- Transmission sleeve — Stainless steel
- Tapered bush — Stainless steel

LINE SHAFT:

- Rod support — Grey cast iron
- Transmission rod — Stainless steel
- Pipe — Stainless steel

Note: Line shaft up to a maximum length of 4 m (longer lengths on request)

MOTOR

Top brand endothermic engine with direct air cooling system up to 26.5 kW and greater power outputs with a heat exchanger.
Greater power output than the maximum absorbed power at the peak of the pump power curve **UNI EN 12845:2020 10.1** NA: continuous overloadable power 10% DIN 6271 - ISO 3046-1

VERTICALFIRE PUMPS VTP 60G PERFORMANCE

Electric Version page 154

Pump Model	ID Pump	Motor		Submersion		Flow Rate - m³/h						
		Electrical	Diesel									
		kW	kW	mm		0	20	40	50	60	70	80
VTP 60G/3A	123	7.5	6.2	370	H (mwc)	41	37	35	32	28	21	14
VTP 60G/4B	124	7.5	7	370		48	46	40	35	29	20	10
VTP 60G/4A	125	11	12.8	370		55	49	47	43	37	28	19
VTP 60G/5A	130	11	12.8	370		69	62	59	54	46	36	24
VTP 60G/6A	135	15	12.8	370		82	74	71	64	55	43	28
VTP 60G/7A	140	15	17.5	370		96	86	82	75	64	50	33
VTP 60G/8A	145	18.5	17.5	370		110	98	94	86	74	57	38
VTP 60G/9A	155	18.5	25.2	370		123	111	106	96	83	64	42
VTP 60G/10A	160	22	25.2	370		137	123	118	107	92	71	47

Values with a GREY background indicate NPSH-R values > 8m.
For installations in HHS-HHP systems, contact our technical department. Nominal hydraulic characteristics of flow rate and head at the pump inlet, with performance tolerances according to UNI EN ISO 9906:2012 Grade 3B

VERTICALFIRE WITH MOTOR PUMP VTP 60G
UNI EN 12845

VERTICAL PUMP

BEVEL GEARBOX

COUPLING JOINT

KEY

NDD	Nom. Delivery Diameter
NCD	Nom. Column Diameter

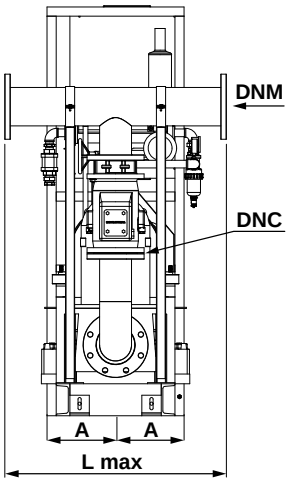

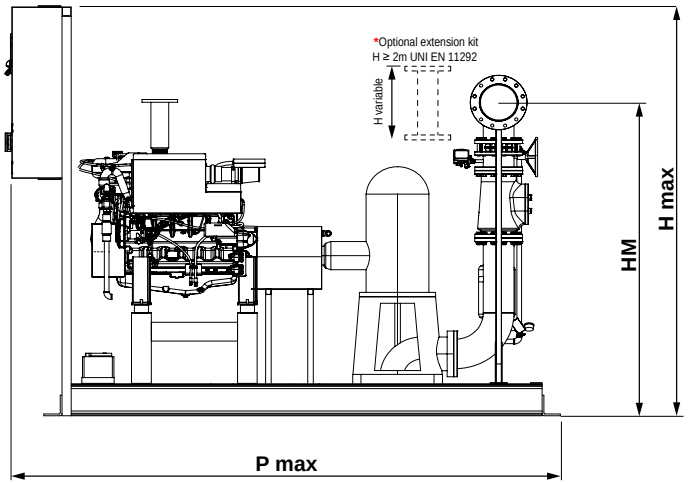

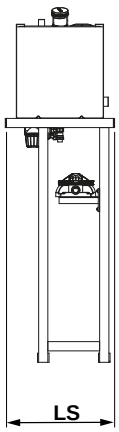

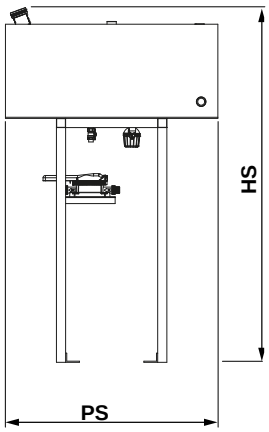

* H rise optional extension ≥ 2m

DIMENSIONS AND WEIGHTS OF VERTICALFIRE WITH ELECTRIC PUMPS VTP 60G

Jockey pumps on page 39

Q max	PRODUCT CODE VTP 60G				Power Pump	Heat exchange system	DNM	HM	A	H max	L max	P max	Weight	Tank Diesel			
m³/h	COMP..	Pump ID	DNC		kW Diesel		Ø	mm	mm	mm	mm	mm	kg	Litres	LS	PS	HS
≤ 70	GV0M0	123	065	D	6.2	Air	80	1231*	275	1560	1860	1560	500	34	451	514	1180
	GV0M0	124	065	D	7	Air	80	1231*	275	1640	1940	1640	550	34	451	514	1180
	GV0M0	125 - 130 -135	065	D	12.8	Air	80	1231*	275	1810	2110	1810	600	34	451	514	1180
	GV0M0	140 - 145	065	D	17.5	Air	80	1231*	275	2010	2310	2010	620	34	451	514	1180
	GV0M0	155 - 160	065	D	25.2	Water/Water	80	1231*	305	2345	2645	2345	690	50	586	850	1017
> 70	GV0M0	123	080	E	6.2	Air	100	1193*	275	1560	1860	1560	550	34	451	514	1180
	GV0M0	124	080	E	7	Air	100	1193*	275	1640	1940	1640	600	34	451	514	1180
	GV0M0	125 - 130 -135	080	E	12.8	Air	100	1193*	275	1810	2110	1810	650	34	451	514	1180
	GV0M0	140 - 145	080	E	17.5	Air	100	1193*	275	2010	2310	2010	670	34	451	514	1180
	GV0M0	155 - 160	080	E	25.2	Water/Water	100	1193*	305	2345	2645	2345	730	50	586	850	1017

The technical data are not binding and can be modified without prior notice | The images are indicative and not binding

VERTICALFIRE WITH MOTOR PUMP VTP 80E
UNI EN 12845

PERFORMANCE RANGE

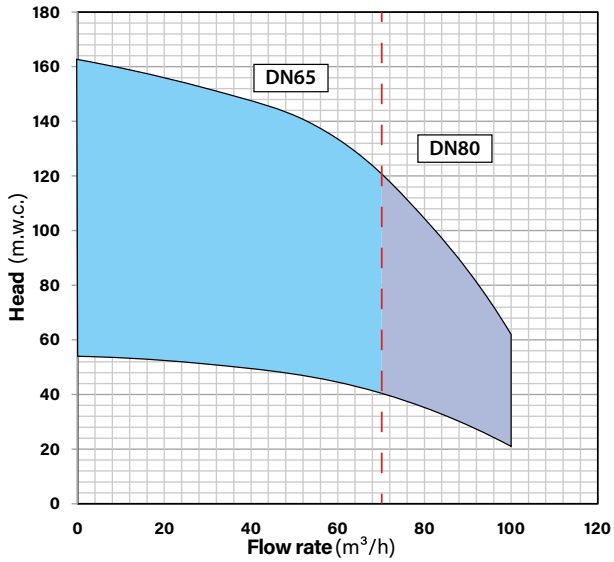

iPRO DIESEL

GSM

VERTICAL PUMP

Submersible axial flow vertical shaft pump, pump body connected to the control unit through the line shaft, fitted with an anti-rotation device to prevent machine counter-rotation when emptying the line shaft.

PUMP

- Control unit — Grey cast iron
- Pump body — Grey cast iron
- Impellers and Diffusers — Grey cast iron
- Shaft — Stainless steel
- Transmission sleeve — Stainless steel
- Tapered bush — Stainless steel

LINE SHAFT:

- Rod support — Grey cast iron
- Transmission rod — Stainless steel
- Pipe — Stainless steel

Note: Line shaft up to a maximum length of 4 m (longer lengths on request)

MOTOR

Top brand endothermic engine with direct air cooling system up to 26.5 kW and greater power outputs with a heat exchanger.
Greater power output than the maximum absorbed power at the peak of the pump power curve **UNI EN 12845:2020 10.1** NA: continuous overloadable power 10% DIN 6271 - ISO 3046-1

VERTICALFIRE PUMPS VTP 80E PERFORMANCE

Electric Version page 156

Pump Model	ID Pump	Motor		Submersion		Flow Rate - m³/h							
		Electrical	Diesel										
		kW	kW	mm		0	20	40	60	70	80	90	100
VTP 80E/2B	171	11	12.8	487.5	H (mwc)	54	52	49	45	41	35	28	21
VTP 80E/3A	180	18.5	17.5	487.5		85	81	77	70	64	56	47	35
VTP 80E/3C	182	15	17.5	487.5		79	74	70	64	58	49	38	26
VTP 80E/4C	183	22	25.2	487.5		105	99	94	85	77	66	50	35
VTP 80E/4B	185	22	25.2	487.5		108	103	98	90	81	70	56	42
VTP 80E/5B	190	30	25.2	487.5		135	129	123	112	102	87	71	52
VTP 80E/5A	195	30	36.5	487.5		142	135	128	117	107	94	78	59
VTP 80E/6C	200	37	36.5	487.5		157	148	140	127	115	98	76	53
VTP 80E/6B	205	37	36.5	487.5		162	155	148	134	122	104	85	62

Values with a GREY background indicate NPSH-R values > 8m.
For installations in HHS-HHP systems, contact our technical department. Nominal hydraulic characteristics of flow rate and head at the pump inlet, with performance tolerances according to UNI EN ISO 9906:2012 Grade 3B

VERTICALFIRE WITH MOTOR PUMP VTP 80E
UNI EN 12845

VERTICAL PUMP

BEVEL GEARBOX

COUPLING JOINT

KEY

NDD	Nom. Delivery Diameter
NCD	Nom. Column Diameter

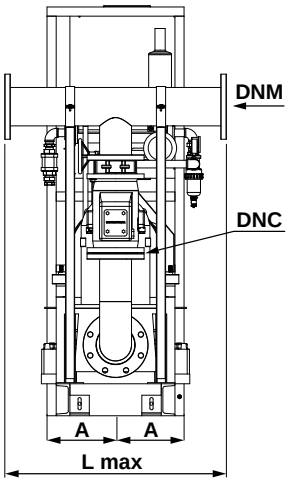

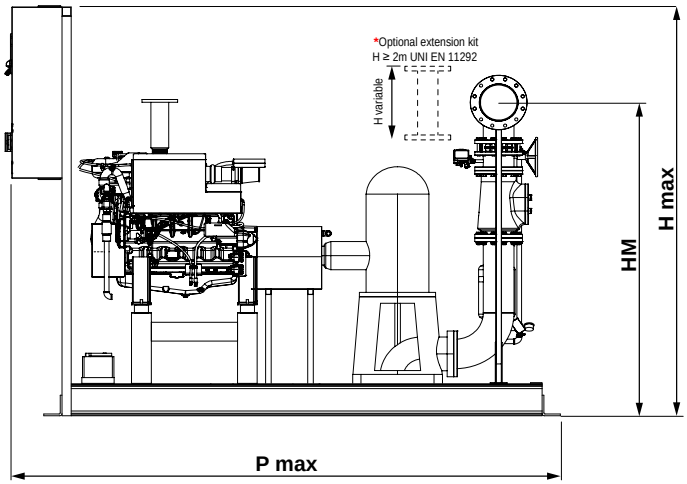

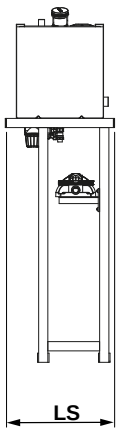

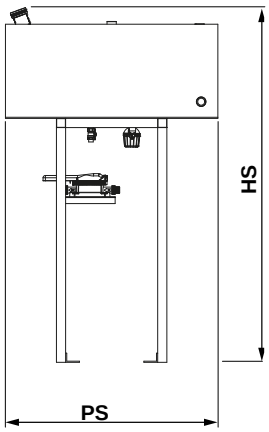

* H rise optional extension ≥ 2m

DIMENSIONS AND WEIGHTS OF VERTICALFIRE WITH ELECTRIC PUMPS VTP 80E

Jockey pumps on page 39

Q max	PRODUCT CODE VTP 80E				Power Pump	Heat exchange system	DNM	HM	A	H max	L max	P max	Weight	Tank Diesel			
m³/h	COMP..	Pump ID	DNC		kW Diesel		Ø	mm	mm	mm	mm	mm	kg	Litres	LS	PS	HS
≤ 70	GV0M0	171	065	D	12.8	Air	80	1231*	275	1810	2110	1810	610	34	451	514	1180
	GV0M0	182 - 180	065	D	17.5	Air	80	1231*	275	2010	2310	2010	625	34	451	514	1180
	GV0M0	183 - 185 - 190	065	D	25.2	Water/Water	80	1291*	265	2345	2645	2345	780	50	586	850	1017
	GV0M0	195 - 200 - 205	065	D	36.5	Water/Water	80	1291*	305	2395	2695	2395	810	80	585	850	1037
> 70	GV0M0	171	080	E	12.8	Air	100	1193*	275	1810	2110	1810	660	34	451	514	1180
	GV0M0	182 - 180	080	E	17.5	Air	100	1193*	275	2010	2310	2010	655	34	451	514	1180
	GV0M0	183 - 185 - 190	080	E	25.2	Water/Water	100	1342*	265	2345	2645	2345	805	50	586	850	1017
	GV0M0	195 - 200 - 205	080	E	36.5	Water/Water	100	1342*	305	2395	2695	2395	860	80	585	850	1037

Fire-fighting units catalogue - Edition: September-2021

VERTICALFIRE WITH MOTOR PUMP VTP 80F
UNI EN 12845

iPRO DIESEL

GSM

PERFORMANCE RANGE

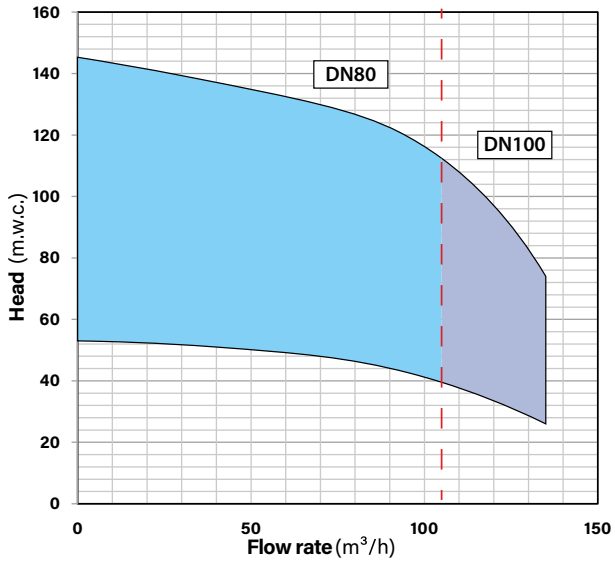

VERTICAL PUMP

Submersible axial flow vertical shaft pump, pump body connected to the control unit through the line shaft, fitted with an anti-rotation device to prevent machine counter-rotation when emptying the line shaft.

PUMP

- Control unit — Grey cast iron
- Pump body — Grey cast iron
- Impellers and Diffusers — Grey cast iron
- Shaft — Stainless steel
- Transmission sleeve — Stainless steel
- Tapered bush — Stainless steel

LINE SHAFT:

- Rod support — Grey cast iron
- Transmission rod — Stainless steel
- Pipe — Stainless steel

Note: Line shaft up to a maximum length of 4 m (longer lengths on request)

MOTOR

Top brand endothermic engine with direct air cooling system up to 26.5 kW and greater power outputs with a heat exchanger.
Greater power output than the maximum absorbed power at the peak of the pump power curve **UNI EN 12845:2020 10.1** NA: continuous overloadable power 10% DIN 6271 - ISO 3046-1

VERTICALFIRE PUMPS VTP 80F PERFORMANCE

Electric Version page 158

Pump Model	ID Pump	Motor		Submersion		Flow Rate - m³/h							
		Electrical	Diesel										
		kW	kW	mm		0	20	40	60	80	100	120	135
VTP 80F/2C	212	18.5	25.2	487.5	H (mwc)	53	52	51	50	47	41	33	26
VTP 80F/2A	215	22	25.2	487.5		58	56	55	53	51	46	39	30
VTP 80F/4D	230	30	36.5	487.5		96	92	87	76	67	55	40	28
VTP 80F/3C	237	30	25.2	487.5		79	78	77	74	71	61	49	38
VTP 80F/3A	238	30	36.5	487.5		87	84	82	80	76	70	58	44
VTP 80F/4C	239	37	47.7	487.5		106	104	102	99	94	82	66	51
VTP 80F/4A	240	45	47.7	487.5		116	112	110	106	102	93	78	59
VTP 80F/5B	247	55	47.7	487.5		139	138	134	129	122	111	91	73
VTP 80F/5A	248	55	47.7	487.5		145	141	137	133	127	116	97	74

Values with a GREY background indicate NPSH-R values > 8m.
For installations in HHS-HHP systems, contact our technical department. Nominal hydraulic characteristics of flow rate and head at the pump inlet, with performance tolerances according to UNI EN ISO 9906:2012 Grade 3B

VERTICALFIRE WITH MOTOR PUMP VTP 80F
UNI EN 12845

VERTICAL PUMP

BEVEL GEARBOX

COUPLING JOINT

KEY

NDD	Nom. Delivery Diameter
NCD	Nom. Column Diameter

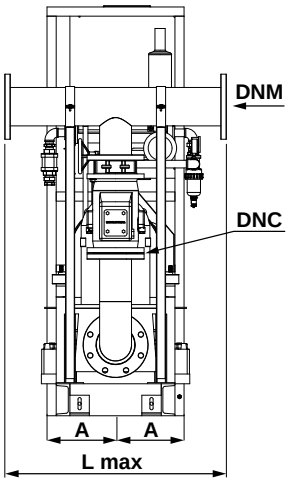

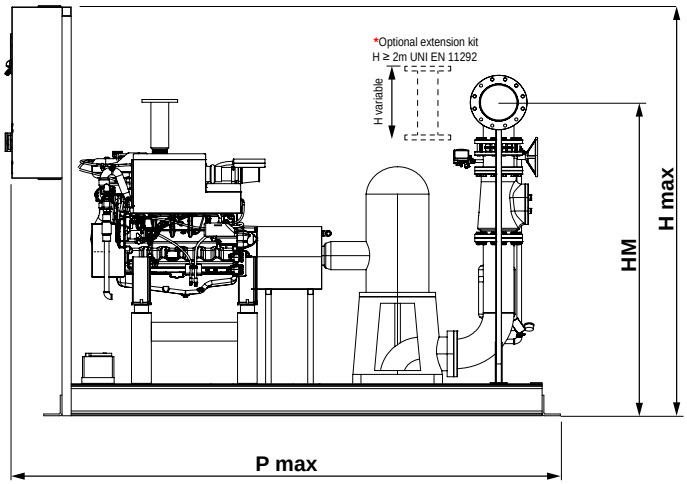

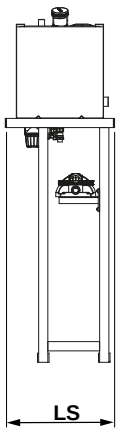

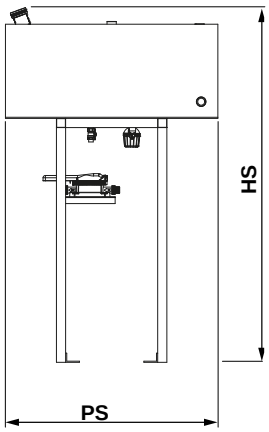

* H rise optional extension ≥ 2m

DIMENSIONS AND WEIGHTS OF VERTICALFIRE WITH ELECTRIC PUMPS VTP 80F

Jockey pumps on page 39

Q max	PRODUCT CODE VTP 80F				Power Pump	Heat exchange system	DNM	HM	A	H max	L max	P max	Weight	Tank Diesel			
m³/h	COMP..	Pump ID	DNC		kW Diesel		Ø	mm	mm	mm	mm	mm	kg	Litres	LS	PS	HS
≤ 105	GV0M0	212 - 215	080	E	25.2	Water/Water	100	1193*	305	2345	2645	2345	725	50	586	850	1017
	GV0M0	237	080	E	25.2	Water/Water	100	1342*	265	2345	2645	2345	755	50	586	850	1017
	GV0M0	230 - 238	080	E	36.5	Water/Water	100	1342*	305	2395	2695	2395	795	50	586	850	1017
	GV0M0	240	080	E	47.7	Water/Water	100	1382*	300	2415	2715	2415	825	80	585	850	1037
	GV0M0	247 - 248	080	E	47.7	Water/Water	100	1453*	300	2415	2715	2415	885	80	585	850	1037
	GV0M0	239	080	E	47.7	Water/Water	100	1342*	300	2355	2655	2355	885	80	585	850	1037
> 105	GV0M0	212 - 215	100	F	25.2	Water/Water	125	1466*	305	2345	2645	2345	775	50	586	850	1017
	GV0M0	237	100	F	25.2	Water/Water	125	1466*	265	2345	2645	2345	805	50	586	850	1017
	GV0M0	230 - 238	100	F	36.5	Water/Water	125	1466*	305	2395	2695	2395	847	50	586	850	1017
	GV0M0	240	100	F	47.7	Water/Water	125	1506*	300	2415	2715	2415	875	80	585	850	1037
	GV0M0	247 - 248	100	F	47.7	Water/Water	125	1541*	300	2415	2715	2415	915	80	585	850	1037
	GV0M0	239	100	F	47.7	Water/Water	125	1466*	300	2355	2655	2355	955	80	585	850	1037

The technical data are not binding and can be modified without prior notice | The images are indicative and not binding

VERTICALFIRE WITH MOTOR PUMP VTP 80G
UNI EN 12845

iPRO DIESEL

GSM

PERFORMANCE RANGE

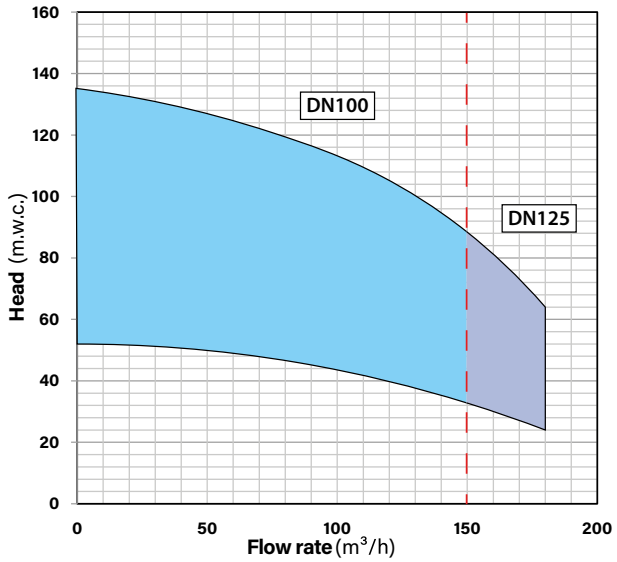

VERTICAL PUMP

Submersible axial flow vertical shaft pump, pump body connected to the control unit through the line shaft, fitted with an anti-rotation device to prevent machine counter-rotation when emptying the line shaft.

PUMP

- Control unit — Grey cast iron
- Pump body — Grey cast iron
- Impellers and Diffusers — Grey cast iron
- Shaft — Stainless steel
- Transmission sleeve — Stainless steel
- Tapered bush — Stainless steel

LINE SHAFT:

- Rod support — Grey cast iron
- Transmission rod — Stainless steel
- Pipe — Stainless steel

Note: Line shaft up to a maximum length of 4 m (longer lengths on request)

MOTOR

Top brand endothermic engine with direct air cooling system up to 26.5 kW and greater power outputs with a heat exchanger.
Greater power output than the maximum absorbed power at the peak of the pump power curve **UNI EN 12845:2020 10.1** NA: continuous overloadable power 10% DIN 6271 - ISO 3046-1

VERTICALFIRE PUMPS VTP 80G PERFORMANCE

Electric Version page 160

Pump Model	ID Pump	Motor		Submersion		Flow Rate - m³/h									
		Electrical	Diesel												
		kW	kW	mm		0	20	40	60	80	100	120	140	160	180
VTP 80G/2B	250	22	25.2	487.5	H (mwc)	52	51	50	48	46	44	40	35	30	24
VTP 80G/3D	255	50	25.2	487.5		71	69	67	65	62	58	52	46	37	30
VTP 80G/3C	257	30	25.2	487.5		77	74	72	70	67	63	58	51	43	34
VTP 80G/3A	260	37	36.5	487.5		81	79	77	74	71	68	63	56	47	38
VTP 80G/3B	265	30	36.5	487.5		79	77	74	72	70	67	62	54	46	35
VTP 80G/4B	268	37	47.7	487.5		105	102	99	96	92	87	80	70	60	47
VTP 80G/5D	285	45	47.7	487.5		119	115	112	108	103	96	87	76	61	48
VTP 80G/5B	290	55	47.7	487.5		131	128	124	120	115	109	100	88	75	59
VTP 80G/5A	295	55	47.7	487.5		135	132	128	124	119	114	105	94	79	64

Values with a GREY background indicate NPSH-R values > 8m.
For installations in HHS-HHP systems, contact our technical department. Nominal hydraulic characteristics of flow rate and head at the pump inlet, with performance tolerances according to UNI EN ISO 9906:2012 Grade 3B

VERTICALFIRE WITH MOTOR PUMP VTP 80G
UNI EN 12845

VERTICAL PUMP

BEVEL GEARBOX

COUPLING JOINT

KEY

NDD	Nom. Delivery Diameter
NCD	Nom. Column Diameter

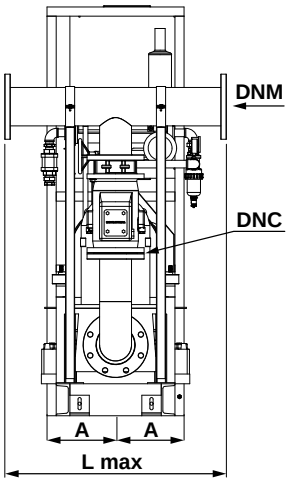

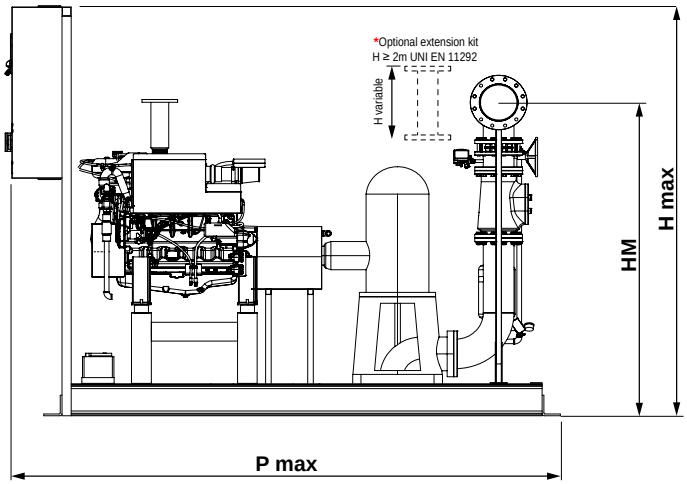

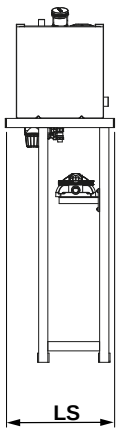

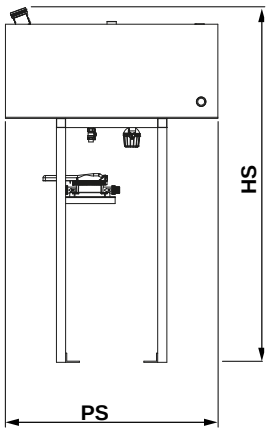

* H rise optional extension ≥ 2m

DIMENSIONS AND WEIGHTS OF VERTICALFIRE WITH ELECTRIC PUMPS VTP 80G

Jockey pumps on page 39

Q max	PRODUCT CODE VTP 80G				Power Pump	Heat exchange system	DNM	HM	A	H max	L max	P max	Weight	Tank Diesel			
m³/h	COMP..	Pump ID	DNC		kW Diesel		Ø	mm	mm	mm	mm	mm	kg	Litres	LS	PS	HS
≤ 105	GV0M0	250	100	F	25.2	Water/Water	125	1501*	305	2345	2645	2345	777	50	586	850	1017
	GV0M0	255 - 257	100	F	25.2	Water/Water	125	1501*	265	2345	2645	2345	898	50	586	850	1017
	GV0M0	260 - 265	100	F	36.5	Water/Water	125	1501*	305	2395	2695	2395	919	80	585	850	1037
	GV0M0	268 - 285 - 290 - 295	100	F	47.7	Water/Water	125	1541*	300	2415	2715	2415	955	80	585	850	1037
> 105	GV0M0	250	125	G	25.2	Water/Water	150	1785*	305	2345	2645	2345	815	50	586	850	1017
	GV0M0	255 - 257	125	G	25.2	Water/Water	150	1815*	265	2345	2645	2345	925	50	586	850	1017
	GV0M0	260 - 265	125	G	36.5	Water/Water	150	1815*	305	2395	2695	2395	955	80	585	850	1037
	GV0M0	268 - 285 - 290 - 295	125	G	47.7	Water/Water	150	1855*	300	2415	2715	2415	1005	80	585	850	1037

The technical data are not binding and can be modified without prior notice | The images are indicative and not binding

VERTICALFIRE WITH MOTOR PUMP VTP 90A
UNI EN 12845

iPRO DIESEL

GSM

PERFORMANCE RANGE

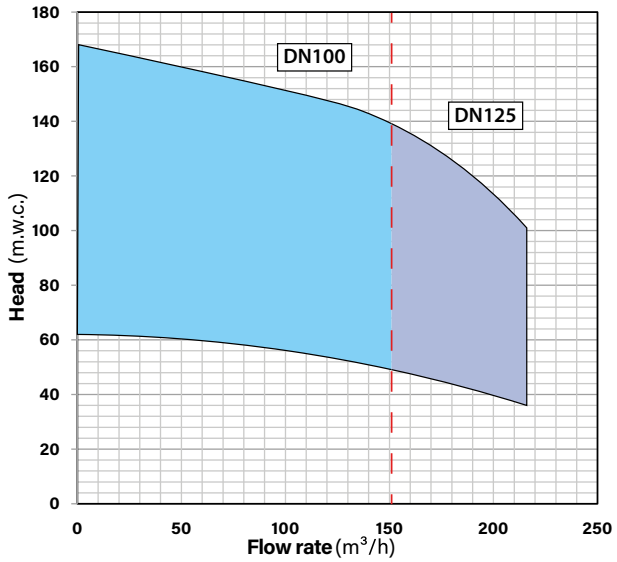

VERTICAL PUMP

Submersible axial flow vertical shaft pump, pump body connected to the control unit through the line shaft, fitted with an anti-rotation device to prevent machine counter-rotation when emptying the line shaft.

PUMP

- Control unit — Grey cast iron
- Pump body — Grey cast iron
- Impellers and Diffusers — Grey cast iron
- Shaft — Stainless steel
- Transmission sleeve — Stainless steel
- Tapered bush — Stainless steel

LINE SHAFT:

- Rod support — Grey cast iron
- Transmission rod — Stainless steel
- Pipe — Stainless steel

Note: Line shaft up to a maximum length of 4 m (longer lengths on request)

MOTOR

Top brand endothermic engine with direct air cooling system up to 26.5 kW and greater power outputs with a heat exchanger.
Greater power output than the maximum absorbed power at the peak of the pump power curve **UNI EN 12845:2020 10.1** NA: continuous overloadable power 10% DIN 6271 - ISO 3046-1

VERTICALFIRE PUMPS VTP 90A PERFORMANCE

Electric Version page 162

Pump Model	ID Pump	Motor		Submersion		Flow Rate - m³/h												
		Electrical	Diesel															
		kW	kW	mm		0	90	100	108	116	126	130	144	152	162	180	198	216
VTP 90A/2B	310	30	36.5	585	H (mwc)	62	56	56	55	54	53	52	50	49	47	44	40	36
VTP 90A/2A	315	37	47.7	585		67	61	60	60	60	59	58	56	55	53	50	46	40
VTP 90A/3C	320	45	47.7	585		87	78	77	76	75	74	72	69	67	63	58	52	47
VTP 90A/3B	325	45	47.7	585		93	84	83	82	81	79	77	75	73	71	66	60	54
VTP 90A/3A	330	55	66	585		101	92	91	90	89	88	87	84	83	80	75	69	61
VTP 90A/4C	335	55	66	585		116	104	103	101	100	98	96	92	89	84	77	70	62
VTP 90A/4B	340	75	66	585		124	112	111	110	108	106	103	100	98	94	88	80	72
VTP 90A/4AB	345	75	66	585		129	117	116	115	114	111	109	107	104	100	94	86	76
VTP 90A/5BC	350	75	108	585		145	135	134	132	130	127	124	121	117	111	103	94	84
VTP 90A/5AB	355	90	108	585		154	147	145	144	142	139	137	133	130	125	118	108	96
VTP 90A/5A	360	90	108	585		168	153	151	150	149	147	145	141	138	133	125	115	101

Values with a GREY background indicate NPSH-R values > 8m.
For installations in HHS-HHP systems, contact our technical department. Nominal hydraulic characteristics of flow rate and head at the pump inlet, with performance tolerances according to UNI EN ISO 9906:2012 Grade 3B

VERTICALFIRE WITH MOTOR PUMP VTP 90A
UNI EN 12845

VERTICAL PUMP

BEVEL GEARBOX

COUPLING JOINT

KEY

NDD	Nom. Delivery Diameter
NCD	Nom. Column Diameter

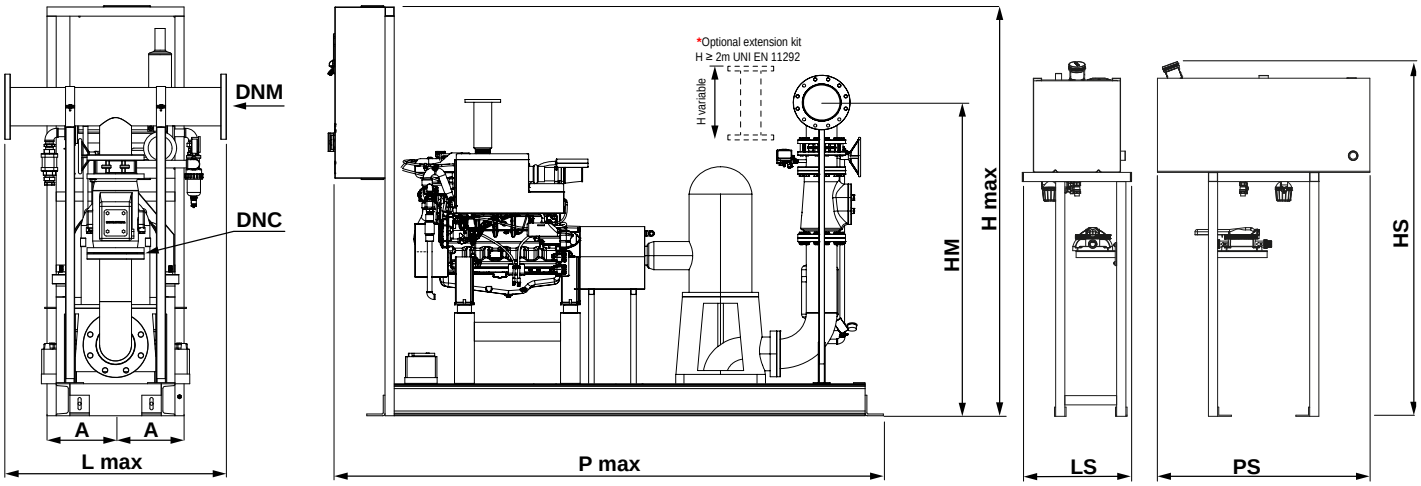

* H rise optional extension ≥ 2m

DIMENSIONS AND WEIGHTS OF VERTICALFIRE WITH ELECTRIC PUMPS VTP 90A

Jockey pumps on page 39

Q max	PRODUCT CODE VTP 90A				Power Pump	Heat exchange system	DNM	HM	A	H max	L max	P max	Weight	Tank Diesel			
m³/h	COMP..	Pump ID	DNC		kW Diesel		Ø	mm	mm	mm	mm	mm	kg	Litres	LS	PS	HS
≤ 150	GVOMO	310	100	F	36.5	Water/Water	125	1496*	305	2395	2695	2395	905	80	585	850	1037
	GVOMO	315	100	F	47.7	Water/Water	125	1496*	300	2355	2655	2355	1005	80	585	850	1037
	GVOMO	320 - 325	100	F	47.7	Water/Water	125	1536*	300	2415	2715	2415	1115	80	585	850	1037
	GVOMO	330	100	F	66	Water/Water	125	1536*	300	2535	2835	2535	1255	125	486	920	1407
	GVOMO	335 - 340 - 345	100	F	66	Water/Water	125	1536*	300	2640	2940	2640	1255	125	486	920	1407
	GVOMO	350 - 355	100	F	108	Water/Water	125	1536*	380	2830	3130	2830	1555	200	785	849	1487
	GVOMO	360	100	F	108	Water/Water	125	1526*	380	2830	3130	2830	1555	200	785	849	1487
> 150	GVOMO	310	125	G	36.5	Water/Water	150	1925*	305	2395	2695	2395	955	80	585	850	1037
	GVOMO	315	125	G	47.7	Water/Water	150	1925*	300	2355	2655	2355	1055	80	585	850	1037
	GVOMO	320 - 325	125	G	47.7	Water/Water	150	1965	300	2415	2715	2415	1155	80	585	850	1037
	GVOMO	330	125	G	66	Water/Water	150	1965	300	2535	2835	2535	1325	125	486	920	1407
	GVOMO	335 - 340 - 345	125	G	66	Water/Water	150	1965	300	2640	2940	2640	1325	125	486	920	1407
	GVOMO	350 - 355	125	G	108	Water/Water	150	1965	380	2830	3130	2830	1655	200	785	849	1487
	GVOMO	360	125	G	108	Water/Water	150	1955	380	2830	3130	2830	1655	200	785	849	1487

The technical data are not binding and can be modified without prior notice | The images are indicative and not binding

VERTICALFIRE WITH MOTOR PUMP VTP 100A
UNI EN 12845

iPRO DIESEL

GSM

PERFORMANCE RANGE

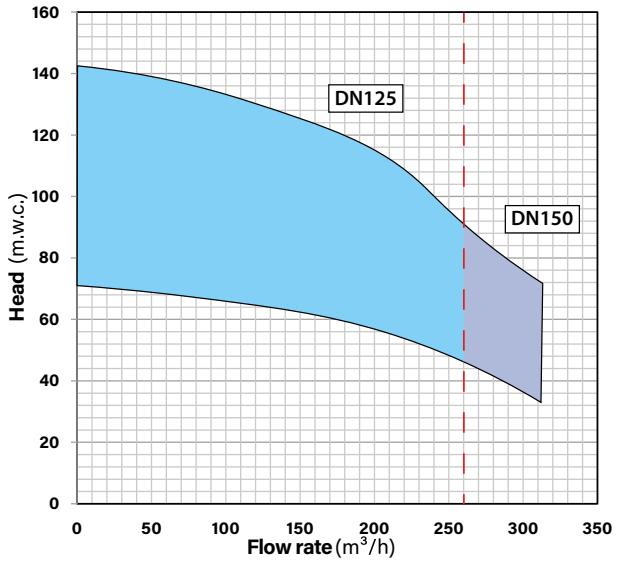

VERTICAL PUMP

Submersible axial flow vertical shaft pump, pump body connected to the control unit through the line shaft, fitted with an anti-rotation device to prevent machine counter-rotation when emptying the line shaft.

PUMP

- Control unit — Grey cast iron
- Pump body — Grey cast iron
- Impellers and Diffusers — Grey cast iron
- Shaft — Stainless steel
- Transmission sleeve — Stainless steel
- Tapered bush — Stainless steel

LINE SHAFT:

- Rod support — Grey cast iron
- Transmission rod — Stainless steel
- Pipe — Stainless steel

Note: Line shaft up to a maximum length of 4 m (longer lengths on request)

MOTOR

Top brand endothermic engine with direct air cooling system up to 26.5 kW and greater power outputs with a heat exchanger.
Greater power output than the maximum absorbed power at the peak of the pump power curve **UNI EN 12845:2020 10.1** NA: continuous overloadable power 10% DIN 6271 - ISO 3046-1

VERTICALFIRE PUMPS VTP 100A PERFORMANCE

Electric Version page 164

Pump Model	ID Pump	Motor		Submersion		Flow Rate - m³/h												
		Electrical	Diesel															
		kW	kW	mm		0	126	144	162	180	198	216	234	252	270	288	306	312
VTP 100A/2D	365	45	47.7	585	H (mwc)	71	65	64	62	60	57	54	52	48	43	40	35	33
VTP 100A/2C	370	55	66	585		76	70	68	66	64	62	60	56	52	48	44	40	38
VTP 100A/2B	375	55	66	585		82	74	73	71	69	66	64	61	57	53	48	44	43
VTP 100A/2A	380	75	66	585		86	78	76	74	73	71	68	65	62	58	53	50	48
VTP 100A/3D	385	75	66	585		107	98	96	93	89	86	81	77	71	65	59	53	50
VTP 100A/3C	390	75	108	585		114	105	102	100	96	93	89	84	78	72	66	60	58
VTP 100A/3B	395	90	108	585		124	111	109	107	104	100	96	91	85	80	72	66	65
VTP 100A/3A	400	90	108	585		130	117	114	111	109	106	102	97	92	86	80	74	72
VTP 100A/4D	405	90	108	585		142	130	128	124	119	114	108	103	95	87	79	70	66

Values with a GREY background indicate NPSH-R values > 8m.
For installations in HHS-HHP systems, contact our technical department. Nominal hydraulic characteristics of flow rate and head at the pump inlet, with performance tolerances according to UNI EN ISO 9906:2012 Grade 3B

VERTICALFIRE WITH MOTOR PUMP VTP 100A
UNI EN 12845

VERTICAL PUMP

BEVEL GEARBOX

COUPLING JOINT

KEY

NDD	Nom. Delivery Diameter
NCD	Nom. Column Diameter

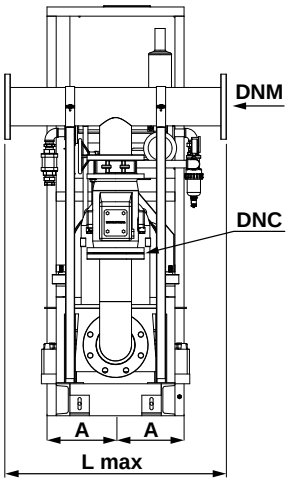

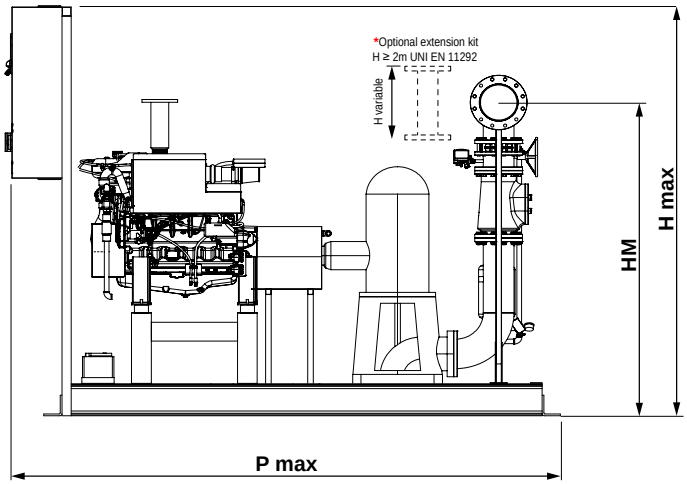

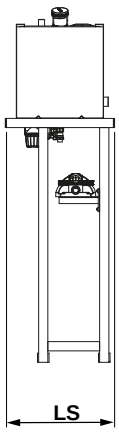

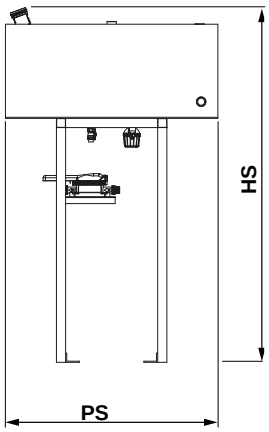

* H rise optional extension ≥ 2m

DIMENSIONS AND WEIGHTS OF VERTICALFIRE WITH ELECTRIC PUMPS VTP 100A

Jockey pumps on page 39

Q max	PRODUCT CODE VTP 100A				Power Pump	Heat exchange system	DNM	HM	A	H max	L max	P max	Weight	Tank Diesel			
m³/h	COMP..	Pump ID	DNC		kW Diesel		Ø	mm	mm	mm	mm	mm	kg	Litres	LS	PS	HS
≤ 260	GV0M0	365	125	G	47.7	Water/Water	125	1965	300	2415	2715	2415	1215	80	585	850	1037
	GV0M0	370 - 375 - 380	125	G	66	Water/Water	125	1965	300	2535	2835	2535	1315	125	486	920	1407
	GV0M0	385	125	G	66	Water/Water	125	1965	300	2640	2940	2640	1315	125	486	920	1407
	GV0M0	390 - 395 - 400 - 405	125	G	108	Water/Water	125	1955	380	2830	3130	2830	1415	200	785	849	1487
> 260	GV0M0	365	150	H	47.7	Water/Water	150	1871*	300	2415	2715	2415	1315	80	585	850	1037
	GV0M0	370 - 375 - 380	150	H	66	Water/Water	150	1871*	300	2535	2835	2535	1415	125	486	920	1407
	GV0M0	385	150	H	66	Water/Water	150	1861*	300	2640	2940	2640	1415	125	486	920	1407
	GV0M0	390 - 395 - 400 - 405	150	H	108	Water/Water	150	1881*	380	2830	3130	2830	1550	200	785	849	1487

Fire-fighting units catalogue - Edition: September-2021

VERTICALFIRE WITH MOTOR PUMP VTP 100B
UNI EN 12845

iPRO DIESEL

GSM

PERFORMANCE RANGE

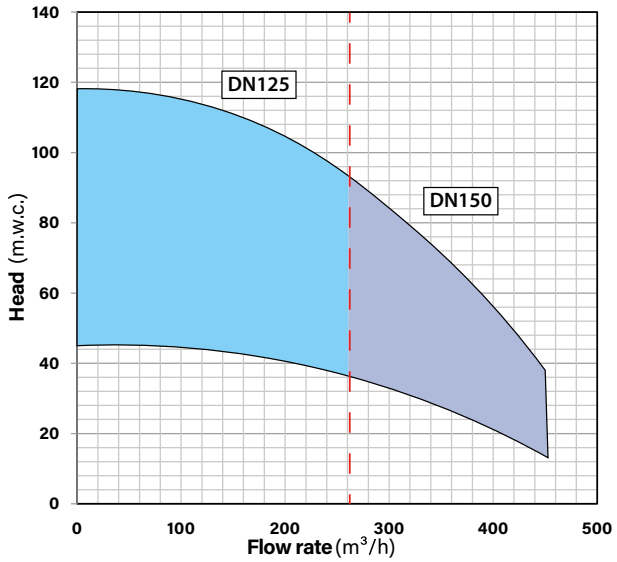

VERTICAL PUMP

Submersible axial flow vertical shaft pump, pump body connected to the control unit through the line shaft, fitted with an anti-rotation device to prevent machine counter-rotation when emptying the line shaft.

PUMP

- Control unit — Grey cast iron
- Pump body — Grey cast iron
- Impellers and Diffusers — Grey cast iron
- Shaft — Stainless steel
- Transmission sleeve — Stainless steel
- Tapered bush — Stainless steel

LINE SHAFT:

- Rod support — Grey cast iron
- Transmission rod — Stainless steel
- Pipe — Stainless steel

Note: Line shaft up to a maximum length of 4 m (longer lengths on request)

MOTOR

Top brand endothermic engine with direct air cooling system up to 26.5 kW and greater power outputs with a heat exchanger.
Greater power output than the maximum absorbed power at the peak of the pump power curve **UNI EN 12845:2020 10.1** NA: continuous overloadable power 10% DIN 6271 - ISO 3046-1

VERTICALFIRE PUMPS VTP 100B PERFORMANCE

Electric Version page 166

Pump Model	ID Pump	Motor		Submersion		Flow Rate - m³/h												
		Electrical	Diesel															
		kW	kW	mm		0	100	150	175	200	250	275	300	325	350	375	400	450
VTP 100B/1A	406	45	47.7	585	H (mwc)	45	44	43	42	40	38	36	34	32	30	28	25	18
VTP 100B/2CD	407	55	66	585		70	68	64	62	58	53	49	44	38	33	25	19	14
VTP 100B/2BC	408	75	66	585		76	74	71	68	66	58	56	51	45	40	34	25	16
VTP 100B/2A	409	90	108	585		90	89	86	84	82	76	74	69	65	61	56	51	38
VTP 100B/3BC	410	90	108	585		117	115	109	107	102	93	87	80	73	65	58	45	20
VTP 100B/3B	415	110	108	585		118	115	111	108	105	96	88	85	76	72	62	56	30

Values with a GREY background indicate NPSH-R values > 8m.
For installations in HHS-HHP systems, contact our technical department. Nominal hydraulic characteristics of flow rate and head at the pump inlet, with performance tolerances according to UNI EN ISO 9906:2012 Grade 3B

VERTICALFIRE WITH MOTOR PUMP VTP 100B
UNI EN 12845

VERTICAL PUMP

BEVEL GEARBOX

COUPLING JOINT

KEY

NDD	Nom. Delivery Diameter
NCD	Nom. Column Diameter

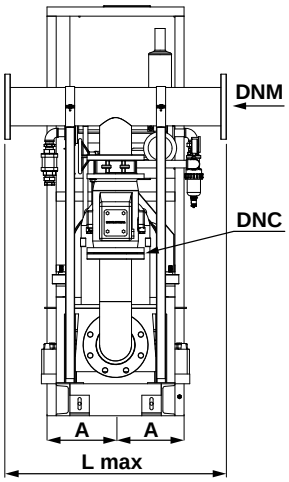

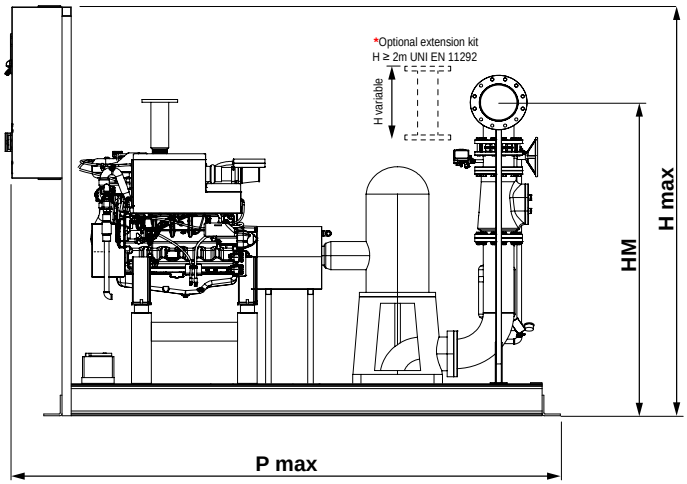

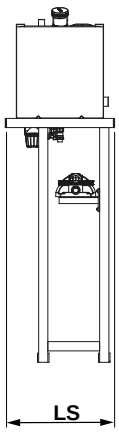

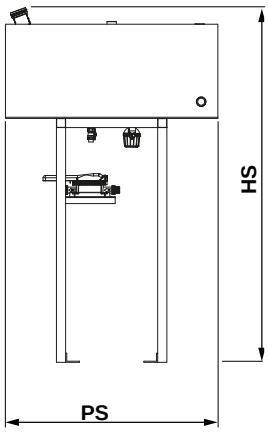

* H rise optional extension ≥ 2m

DIMENSIONS AND WEIGHTS OF VERTICALFIRE WITH ELECTRIC PUMPS VTP 100B

Jockey pumps on page 39

Q max	PRODUCT CODE VTP 100B				Power Pump	Heat exchange system	DNM	HM	A	H max	L max	P max	Weight	Tank Diesel			
m³/h	COMP..	Pump ID	DNC		kW Diesel		Ø	mm	mm	mm	mm	mm	kg	Litres	LS	PS	HS
≤ 260	GVOMO	406	125	G	47.7	Water/Water	125	1965 *	300	2415	2715	2415	1157	80	585	850	1037
	GVOMO	407 - 408	125	G	66	Water/Water	125	1955*	300	2535	2835	2535	1215	125	486	920	1407
	GVOMO	409 - 410 - 413	125	G	108	Water/Water	125	1955*	380	2830	3130	2830	1315	200	785	849	1487
	GVOMO	415	125	G	108	Water/Water	125	1955	380	2830	3130	2830	1315	350	820	950	1837
> 260	GVOMO	406	150	H	47.7	Water/Water	150	1891	300	2415	2715	2415	1257	80	585	850	1037
	GVOMO	407 - 408	150	H	66	Water/Water	150	1881	300	2535	2835	2535	1315	125	486	920	1407
	GVOMO	409 - 410 - 413	150	H	108	Water/Water	150	1881	380	2830	3130	2830	1415	200	785	849	1487
	GVOMO	415	150	H	108	Water/Water	150	1911	380	2830	3130	2830	1415	350	820	950	1837

Fire-fighting units catalogue - Edition: September-2021

FAQ

SUBMERSIBLE ELECTRIC PUMPS
IS IT TRUE THAT UNI EN 12845 PROHIBITS THE USE OF SUBMERSIBLE PUMPS

UNI EN 12845 10.6.1 allows submersible pumps to be used, but imposes limits on their use, indicating that they should only be mounted if it is essential to do so, and asking for this choice to be technically justified. The report must indicate the reasons why it was not possible to use the diagrams with the positive suction head centrifugal pumps or the VTPs. The hydraulic diagram obtained is that of POSITIVE SUCTION HEAD. The pumps are placed in a horizontal position and inserted in cooling chambers and the water cools it as it laps the motor.

SUBMERSIBLE ELECTRIC PUMPS
CAN TOP SINGLE WATER SUPPLIES BE IMPLEMENTED

With the main submersible fire-fighting pumps, only SINGLE TYPE WATER SUPPLIES can be set up and never TOP TYPE SUPPLIES. A generator can be installed as a safety energy source to achieve greater reliability, not from the standard but from the functional perspective.
Due to the characteristics of the room, UNI/TR 11438:2016 7.1 sets forth that even if submersible pumps are used, compliance with UNI EN 12845:2020 and UNI 11292:2019 is required.

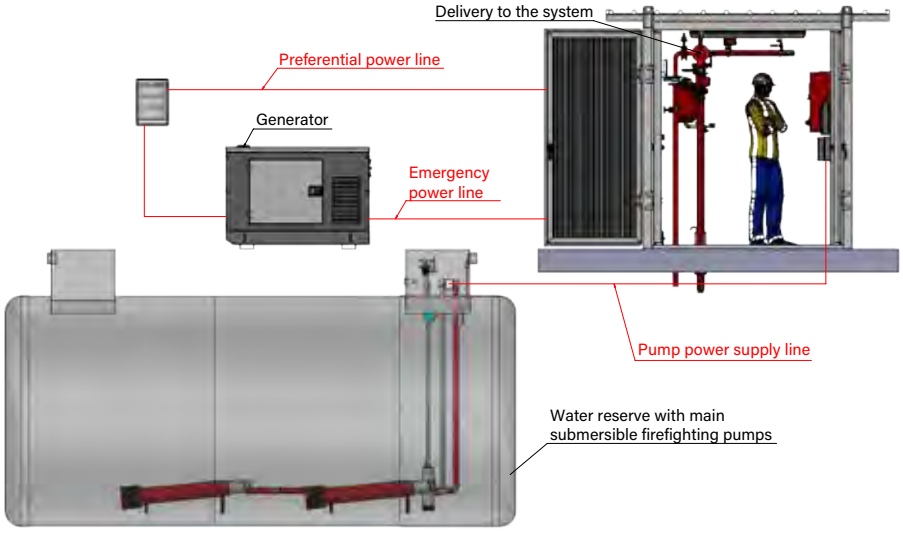

MORE INFORMATION
WWW.IDRO-ELETTRICA.IT

EUROFIRE SOM ELECTRIC

UNI EN 12845 - UNI EN 10779

EUROFIRE SOM

Fire-fighting pressurisation units UNI EN 12845 with submersible electric pumps

MAIN FEATURES

The EUROFIRE SOM series includes units with:

Flow rate Q	up to	150	m^3/h
Head H	up to	166	mwc
Electric pump	up to	30	kW

Every module is autonomous and reflects the definition of a pumping unit (PUMP-SET) as described in **UNI 11292:2019 3.15.**
Every pumping unit of the SOM VERTICALFIRE series therefore includes:

- Submersible main pumps
- Submersible electric motors
- Base in metal profiles
- Electrical panel with Epro intelligent control unit
- Submersible Jockey pump complete with control circuit
- Hydraulic accessories external to the pump-set with diameters sized according to U**NI EN 12845 13.2.3**
- Electric accessories external to the pump-set
- 10 metres of cable for every electric pump

The pumping unit is designed to be independently secured to the foundation/base floor **UNI 11292:2019 6.6**

It is typical to solve installation problems related to pump intake (height difference or pipes that are too long) or to the dimensions of the installation room, insufficient for a traditional unit. Please note that the submersible electric pumps can only be used if positive suction head horizontal pumps or vertical turbine pumps cannot be applied UNI EN 12845 10.6.1

Hydraulic diagram page 196
List of components page 195
Accessories page 215

EUROFIRE SOM
Fire-fighting pressurisation units according to UNI EN 12845
with submersible electric pumps

MAIN COMPONENTS

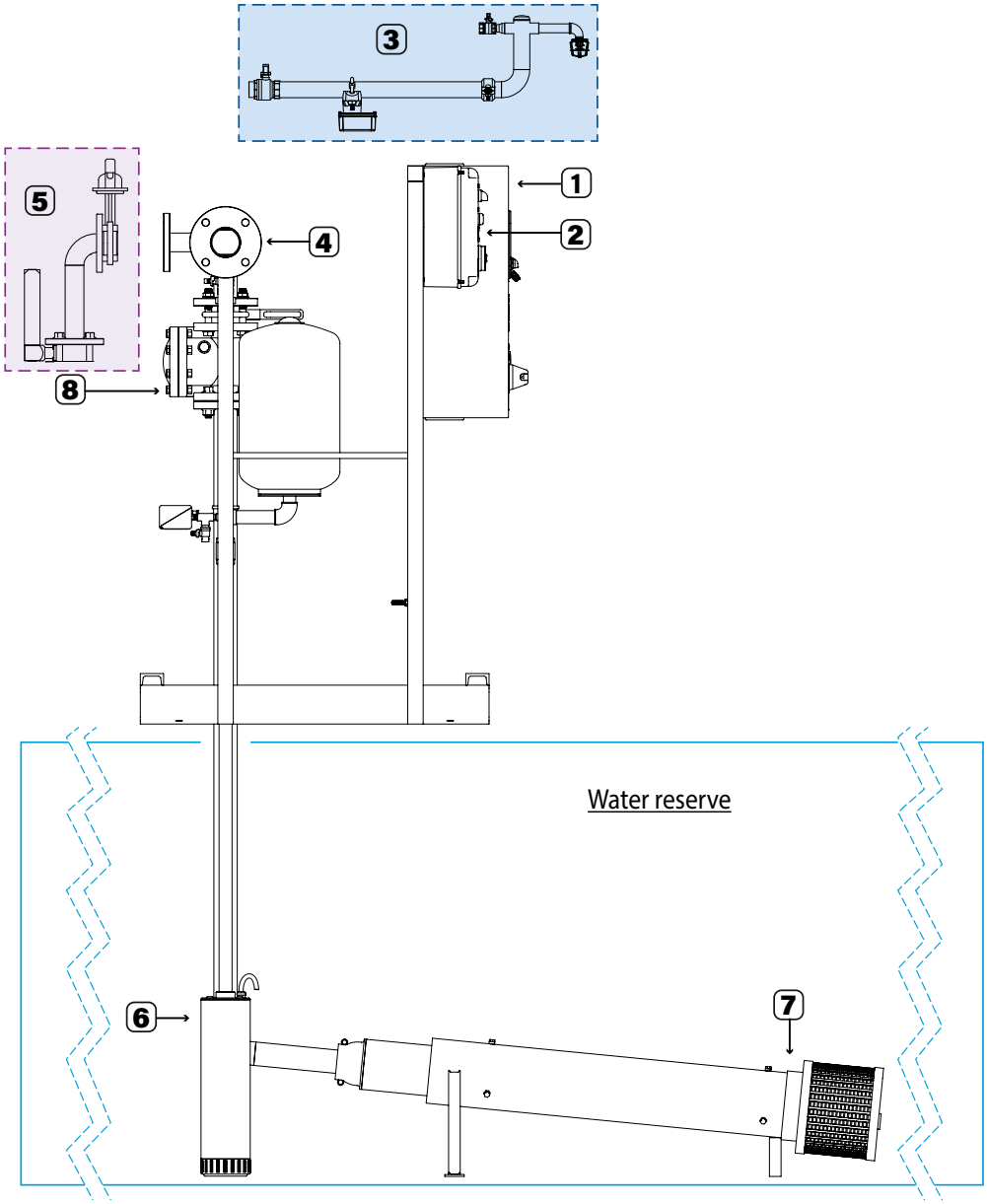

1	Electric Control Unit
2	Jockey pump electrical panel
3	2" Sprinkler Kit complete with Flow switch (2a) in accordance with UNI EN 12259-5
4	Delivery to the system
5	Flowmeter kit complete with upstream pipe section L> 5 diam.
6	Jockey pump with H>80% H main pump UNI EN 12845 10.7.5.2
7	Submersible main pump complete with cooling chamber
8	Inspectable check valve

The technical data are not binding and can be modified without prior notice | The images are indicative and not binding

EUROFIRE SOM WITH 1 ELECTRIC PUMP

Fire-fighting pressurisation units according to UNI EN 12845
With submersible electric pumps

HYDRAULIC DIAGRAM

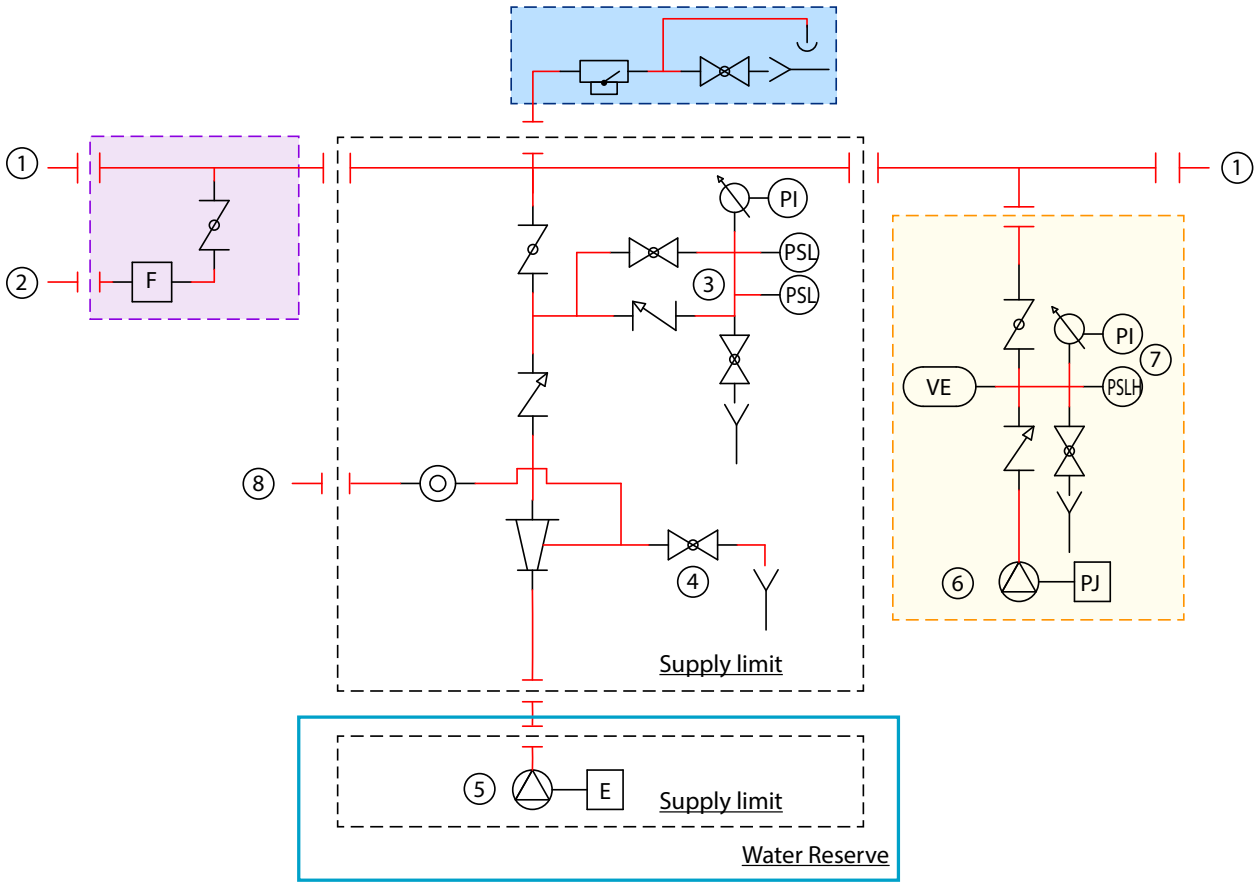

KEY

1. Delivery to the system
2. Return in flow meter tank
3. Pressure switch test circuit
4. Drain valve (leak test)
5. Main pump
6. Jockey pump
7. Jockey pump pressure switch unit
8. Priming tank water supply

Instruments

Piping

Optional supply

Flow Meter Kit

Jockey pump kit

Sprinkler circuit kit

	Pump		Normally open ball valve	PSLH	Jockey Pump start/stop pressure switch
E	Main pump electric motor		Normally closed ball valve	PSL	Pump start pressure switch
D	Main pump diesel engine		Throttle valve with handwheel	VI	Vacuum gauge
PJ	Jockey Pump electrical motor		Throttle valve with lever		Water Reserve Tank
	Eccentric cone		Clapet check valve	A	Priming Tank 500 ℓ
	Expansion		Safety valve		EC UNI EN 12259-5 flow switch
VE	Preloaded expansion vessel		Gate valve with handwheel		Pendent sprinkler head 1/2 k=80
PI	Pressure gauge	F	Flowmeter	IF	Flow indicator
	Diaphragm		Open drain		Heat exchanger
	"Y' filter		Pressure reducer		Filling float

Fire-fighting units catalogue - Edition: September-2021

The technical data are not binding and can be modified without prior notice | The images are indicative and not binding

EUROFIRE SOM WITH 2 ELECTRIC PUMPS

Fire-fighting pressurisation units according to UNI EN 12845
With submersible electric pumps

HYDRAULIC DIAGRAM

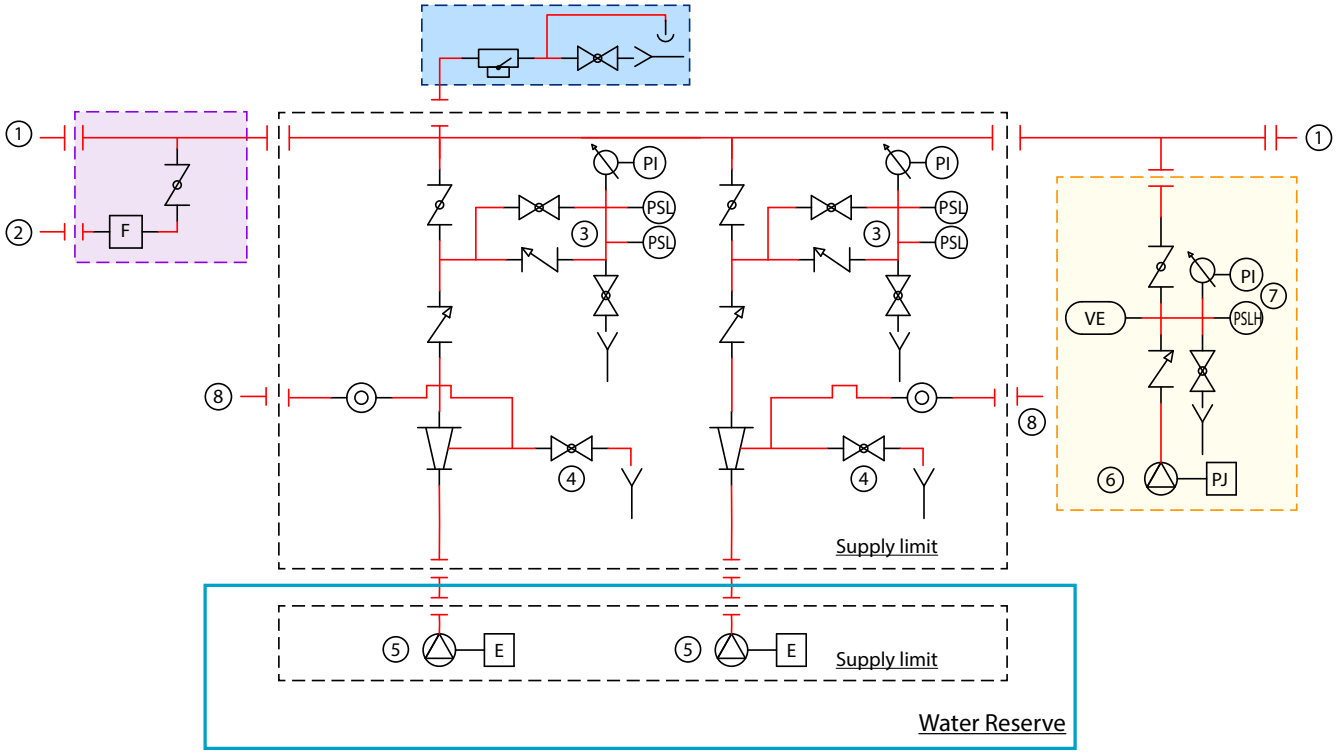

KEY

1. Delivery to the system
2. Return in flow meter tank
3. Pressure switch test circuit
4. Drain valve (leak test)
5. Main pump
6. Jockey pump
7. Jockey pump pressure switch unit
8. Priming tank water supply

Instruments

Piping

Optional supply

Flow Meter Kit

Jockey pump kit

Sprinkler circuit kit

	Pump		Normally open ball valve	PSLH	Jockey Pump start/stop pressure switch
E	Main pump electric motor		Normally closed ball valve	PSL	Pump start pressure switch
D	Main pump diesel engine		Throttle valve with handwheel	V	Vacuum gauge
PJ	Jockey Pump electrical motor		Throttle valve with lever		Water Reserve Tank
	Eccentric cone		Clapet check valve	A	Priming Tank 500 ℓ
	Expansion		Safety valve		EC UNI EN 12259-5 flow switch
VE	Preloaded expansion vessel		Gate valve with handwheel		Pendent sprinkler head 1/2 k=80
P	Pressure gauge	F	Flowmeter	IF	Flow indicator
	Diaphragm		Open drain		Heat exchanger
	"Y' filter		Pressure reducer		Filling float

Fire-fighting units catalogue - Edition: September-2021

SOMFIRE WITH SUBMERSIBLE ELECTRIC PUMP IDF4
UNI EN 12845

PERFORMANCE RANGE

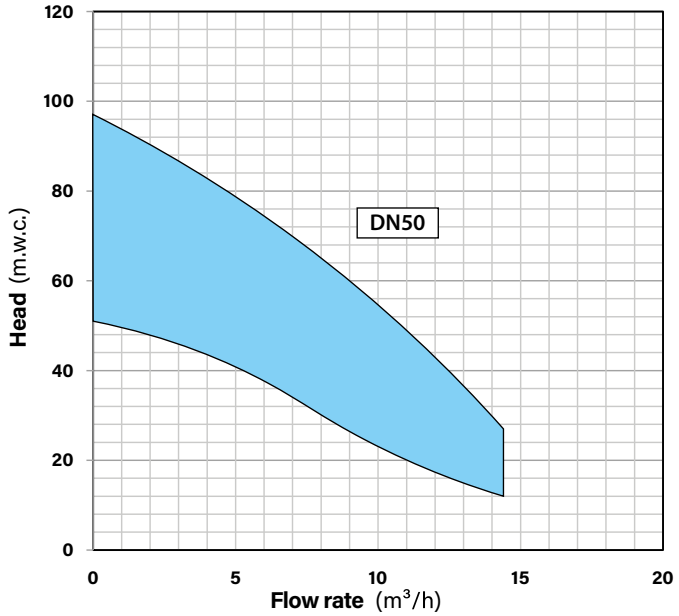

PRO ELECTRIC

GSM

SUBMERSIBLE CENTRIFUGAL PUMP

Multistage submersible centrifuge with motor connection according to NEMA standard.

- Body: Radial
- Impeller: Thermoplastic resin
- Shaft: AISI 304 Stainless Steel

MOTOR

Three-phase asynchronous closed submersible IP68.
Power calculated based on the power absorbed at the point of the characteristic curve **UNI EN 12845:2020 10.1**

HYDRAULIC PUMPS IDF4 EFFICIENCY

Pump Model	ID Pump	Motor Electrical kW	Column Ø		Flow Rate - m³/h 0	4.8	6	7.2	8.4	9.6	10.8	12	14.4	16.8	18
IDF4-E300	405	2.2	50	H (mwc)	82	75	71	66	59	50	40	30			
IDF4-F300	410	2.2	50		83	71	67	63	58	54	48	40	20		
IDF4-G300	415	2.2	50		51	41	37	31	29	24	22	17	12		
IDF4-G400	430	3	50		70	57	52	44	41	34	32	24	18		
IDF4-G550	802	4	50		97	79	73	63	58	50	46	36	27		

The values to the left of the reference refer to the maximum allowed delivery speed of 6 m/sec - The RED values entail speeds higher than 6 m/sec - The Values with GREY background indicate NPSH-R > 5m values.
For installations in HHS-HHP systems, contact our technical department. Nominal hydraulic characteristics of flow rate and head at the pump inlet, with performance tolerances according to UNI EN ISO 9906:2012 Grade 3B

SOMFIRE WITH SUBMERSIBLE ELECTRIC PUMP IDF4
UNI EN 12845

SUBMERSIBLE CENTRIFUGAL PUMP

COOLING CHAMBER

KEY

NID	Nom. Intake Diameter
NDD	Nom. Delivery Diameter
NCD	Nom. Column Diameter
NFTD	Nom. Flow Test Diameter

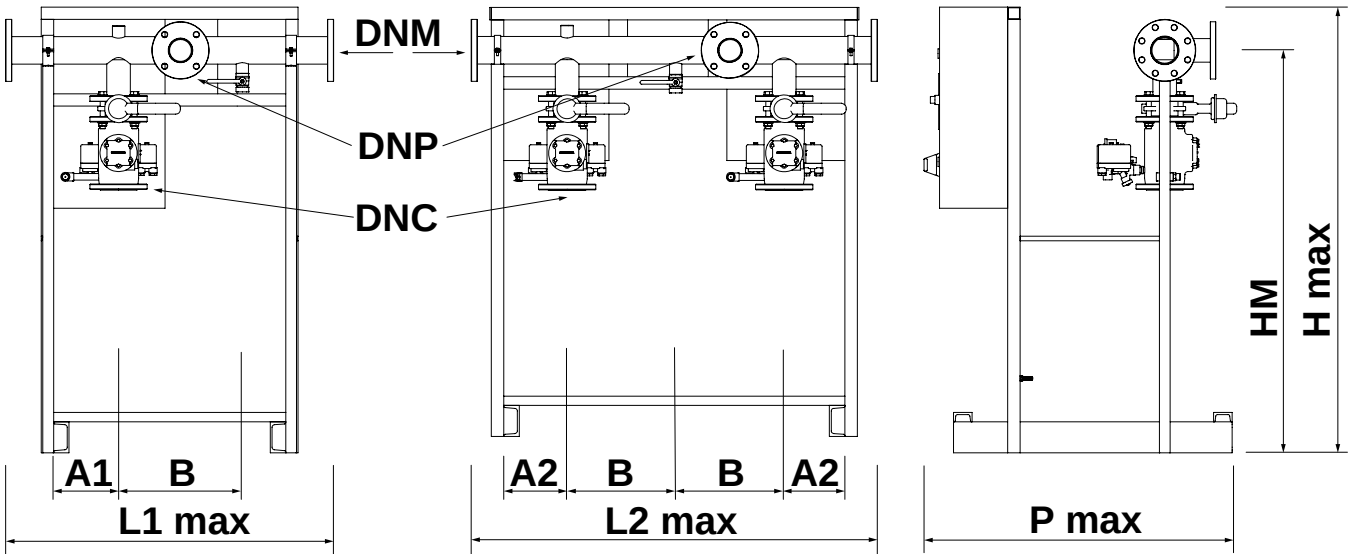

DIMENSIONS AND WEIGHTS OF SOMFIRE WITH ELECTRIC PUMPS IDF4

Jockey pumps on page 39

Q max	PRODUCT CODE IDF4				Power Pump	DNM	NFTD	HM	A1	A2	B	H max	L1 max	L2 max	P max	Weight 1E	Weight 2E
m³/h	COMP..	Quantity pumps	ID Pump	DNC	kW Electrical	Ø	Ø	mm	mm	mm	mm	mm	mm	mm	mm	kg	kg
≤ 40	G0S0	1E - 2E	405-410-415	050	2.2	65	40	1245	240	305	350	1440	830	1180	1020	215	350
	G0S0	1E - 2E	430	050	3	65	40	1245	240	305	350	1440	830	1180	1020	215	350
	G0S0	1E - 2E	802	050	4	65	40	1245	240	305	350	1440	830	1180	1020	215	350

Fire-fighting units catalogue - Edition: September-2021

SOMFIRE WITH SUBMERSIBLE ELECTRIC PUMP ID6 F
UNI EN 12845

PERFORMANCE RANGE

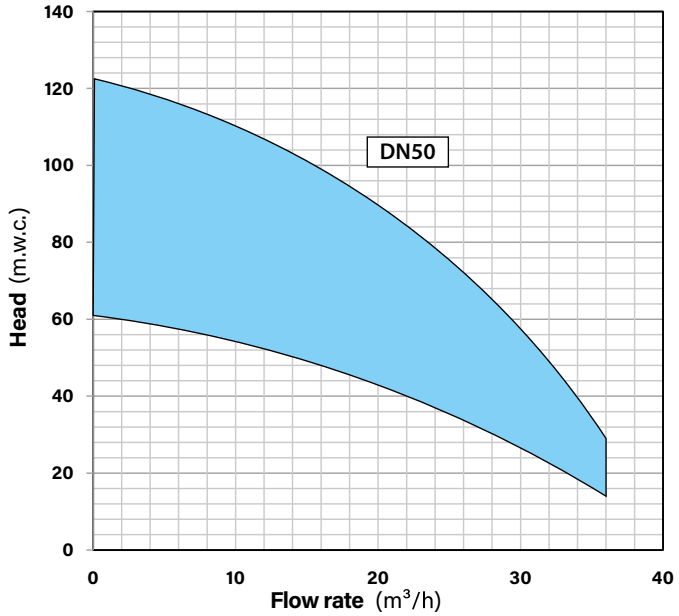

PRO ELECTRIC

GSM

SUBMERSIBLE CENTRIFUGAL PUMP

Multistage submersible centrifuge with motor connection according to NEMA standard.

- Body: Radial
- Impeller: Thermoplastic resin
- Shaft: AISI 304 Stainless Steel

MOTOR

Three-phase asynchronous closed submersible IP68.
Power calculated based on the power absorbed at the point of the characteristic curve **UNI EN 12845:2020 10.1**

HYDRAULIC PUMPS ID6 F EFFICIENCY

Pump Model	ID Pump	Motor Electrical kW	Column Ø		Flow Rate - m³/h 0	12	15	16.8	18	21	24	30	36	42	48
ID6 F/4	803	4	50	H (mwc)	61	52	49	47	46	43	38	28	14		
ID6 F/6	810	5.5	50		91	77	74	71	69	64	58	42	22		
ID6 F/8	820	7.5	50		123	105	100	96	94	86	78	56	29		

The values to the left of the reference refer to the maximum allowed delivery speed of 6 m/sec - The RED values entail speeds higher than 6 m/sec - The Values with GREY background indicate NPSH-R > 5m values.
For installations in HHS-HHP systems, contact our technical department. Nominal hydraulic characteristics of flow rate and head at the pump inlet, with performance tolerances according to UNI EN ISO 9906:2012 Grade 3B

SOMFIRE WITH SUBMERSIBLE ELECTRIC PUMP ID6 F
UNI EN 12845

SUBMERSIBLE CENTRIFUGAL PUMP

COOLING CHAMBER

KEY

NID	Nom. Intake Diameter
NDD	Nom. Delivery Diameter
NCD	Nom. Column Diameter
NFTD	Nom. Flow Test Diameter

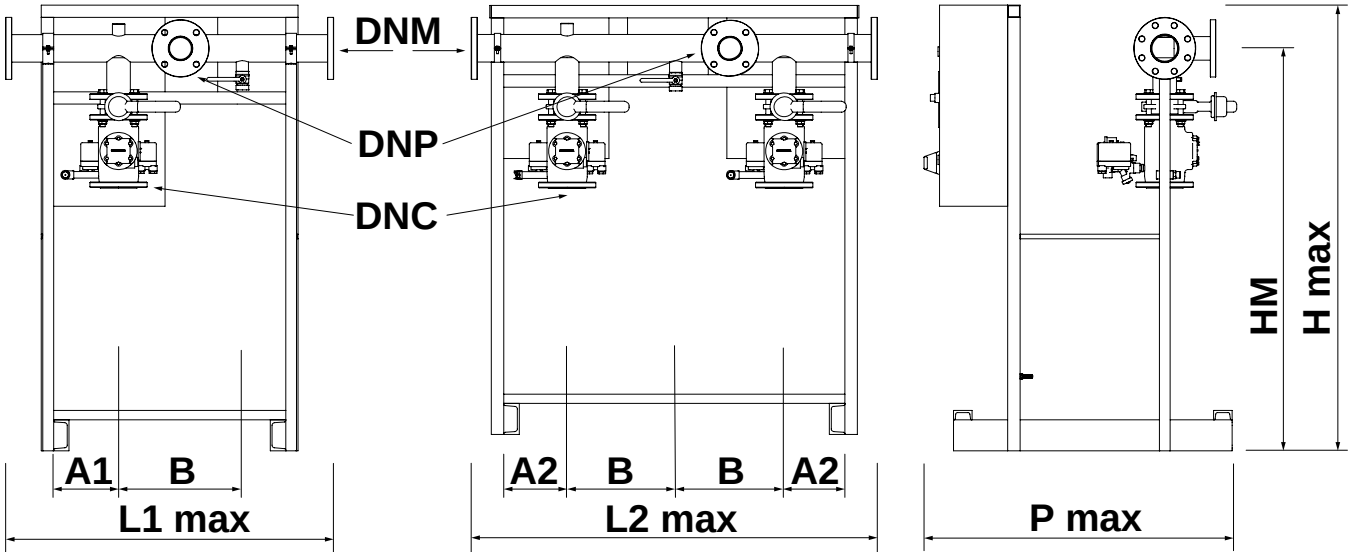

DIMENSIONS AND WEIGHTS OF SOMFIRE WITH ELECTRIC PUMPS ID6 F

Jockey pumps on page 39

Q max	PRODUCT CODE ID6 F				Power Pump	DNM	NFTD	HM	A1	A2	B	H max	L1 max	L2 max	P max	Weight 1E	Weight 2E
m³/h	COMP..	Quantity pumps	ID Pump	DNC	kW Electrical	Ø	Ø	mm	mm	mm	mm	mm	mm	mm	mm	kg	kg
≤ 40	G0S0	1E - 2E	803	050	4	65	40	1245	240	305	350	1440	830	1180	1020	215	350
	G0S0	1E - 2E	810	050	5.5	65	40	1245	240	305	350	1440	830	1180	1020	215	350
	G0S0	1E - 2E	820	050	7.5	65	40	1245	240	305	350	1440	830	1180	1020	215	350

Fire-fighting units catalogue - Edition: September-2021

SOMFIRE WITH SUBMERSIBLE ELECTRIC PUMP ID6 H
UNI EN 12845

PRO ELECTRIC

GSM

PERFORMANCE RANGE

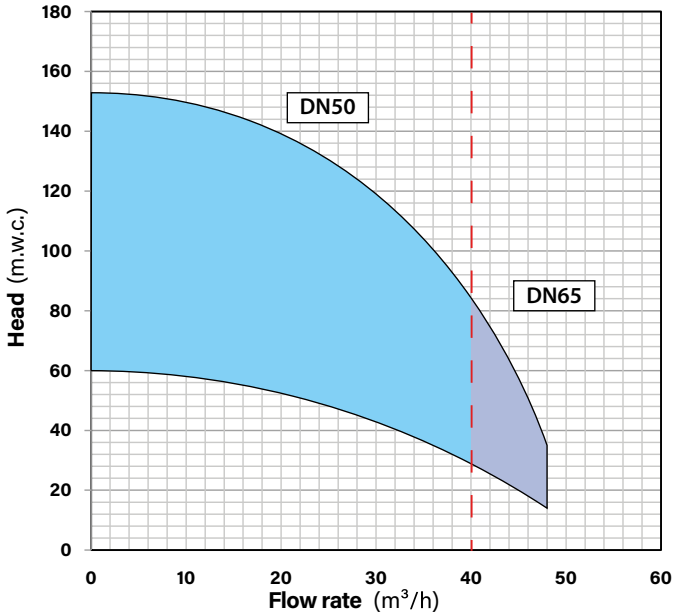

SUBMERSIBLE CENTRIFUGAL PUMP

Multistage submersible centrifuge with motor connection according to NEMA standard.

- Body: Radial
- Impeller: Thermoplastic resin
- Shaft: AISI 304 Stainless Steel

MOTOR

Three-phase asynchronous closed submersible IP68.
Power calculated based on the power absorbed at the point of the characteristic curve **UNI EN 12845:2020 10.1**

HYDRAULIC PUMPS ID6 H EFFICIENCY

Pump Model	ID Pump	Motor Electrical kW	Column Ø		Flow Rate - m³/h 0	16.8	18	21	24	30	36	42	48	54	66
ID6 H/4	821	5.5	50	H (mwc)	60	57	54	52	50	45	38	28	14		
ID6 H/5	822	7.5	50		75	70	67	65	63	57	47	35	17		
ID6 H/6	825	11	65		92	86	82	80	77	69	58	42	21		
ID6 H/8	823	11	65		122	112	109	106	102	92	77	56	28		
ID6 H/10	824	15	50		153	145	136	133	128	115	96	70	35		

The values to the left of the reference refer to the maximum allowed delivery speed of 6 m/sec - The RED values entail speeds higher than 6 m/sec - The Values with GREY background indicate NPSH-R > 5m values.
For installations in HHS-HHP systems, contact our technical department. Nominal hydraulic characteristics of flow rate and head at the pump inlet, with performance tolerances according to UNI EN ISO 9906:2012 Grade 3B

SOMFIRE WITH SUBMERSIBLE ELECTRIC PUMP ID6 H
UNI EN 12845

SUBMERSIBLE CENTRIFUGAL PUMP

COOLING CHAMBER

KEY

NID	Nom. Intake Diameter
NDD	Nom. Delivery Diameter
NCD	Nom. Column Diameter
NFTD	Nom. Flow Test Diameter

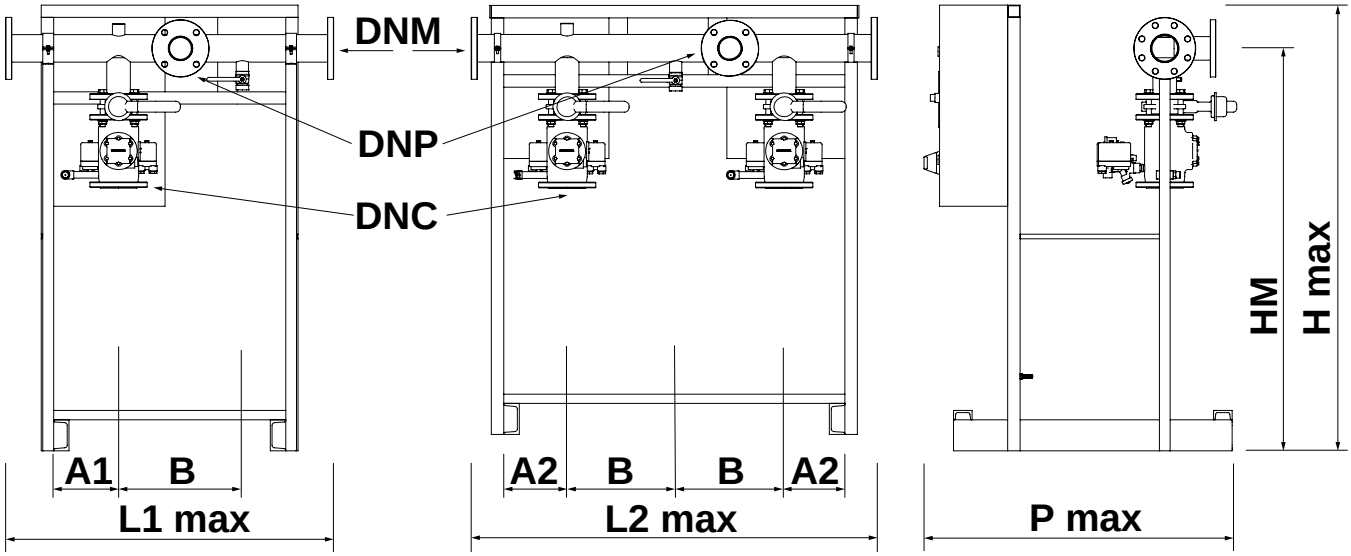

DIMENSIONS AND WEIGHTS OF SOMFIRE WITH ELECTRIC PUMPS ID6 H

Jockey pumps on page 39

Q max	PRODUCT CODE ID6 H				Power Pump	DNM	NFTD	HM	A1	A2	B	H max	L1 max	L2 max	P max	Weight 1E	Weight 2E
m³/h	COMP..	Quantity pumps	ID Pump	DNC	kW Electrical	Ø	Ø	mm	mm	mm	mm	mm	mm	mm	mm	kg	kg
≤ 40	G0S0	1E - 2E	821	050	5.5	65	50	1245	240	305	350	1440	830	1180	1020	215	350
	G0S0	1E - 2E	822	050	7.5	65	50	1245	240	305	350	1440	830	1180	1020	215	350
	G0S0	1E - 2E	823 - 825	050	11	65	50	1245	240	305	350	1440	830	1180	1020	215	350
	G0S0	1E - 2E	824	050	15	65	50	1245	240	305	350	1440	830	1180	1020	215	350
> 40	G0S0	1E - 2E	821	065	5.5	80	65	1310	240	305	350	1440	830	1180	1025	215	350
	G0S0	1E - 2E	822	065	7.5	80	65	1310	240	305	350	1440	830	1180	1025	215	350
	G0S0	1E - 2E	823 - 825	065	11	80	65	1310	240	305	350	1440	830	1180	1025	215	350
	G0S0	1E - 2E	824	065	15	80	65	1310	240	305	350	1440	830	1180	1025	215	350

Fire-fighting units catalogue - Edition: September-2021

SOMFIRE WITH SUBMERSIBLE ELECTRIC PUMP ID6 L
UNI EN 12845

PERFORMANCE RANGE

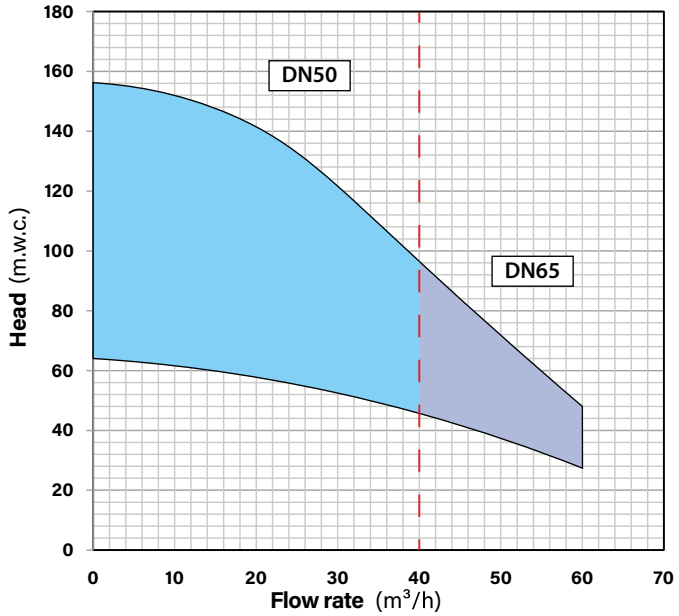

PRO ELECTRIC

GSM

SUBMERSIBLE CENTRIFUGAL PUMP

Multistage submersible centrifuge with motor connection according to NEMA standard.

- Body: Radial
- Impeller: Thermoplastic resin
- Shaft: AISI 304 Stainless Steel

MOTOR

Three-phase asynchronous closed submersible IP68.
Power calculated based on the power absorbed at the point of the characteristic curve **UNI EN 12845:2020 10.1**

HYDRAULIC PUMPS ID6 L EFFICIENCY

Pump Model	ID Pump	Motor Electrical kW	Column Ø		Flow Rate - m³/h 0	16.8	18	21	24	30	36	42	48	54	60
ID6 55/4	845	7.5	50	H (mwc)	64	61	58	56	53	51	48	45	41	37	33
ID6 L/7	842	11	50		91	85	80	76	73	71	62	52	44	37	28
ID6 L/12	844	18.5	50		156	145	140	130	125	122	105	89	76	63	48

The values to the left of the reference refer to the maximum allowed delivery speed of 6 m/sec - The RED values entail speeds higher than 6 m/sec - The Values with GREY background indicate NPSH-R > 5m values.
For installations in HHS-HHP systems, contact our technical department. Nominal hydraulic characteristics of flow rate and head at the pump inlet, with performance tolerances according to UNI EN ISO 9906:2012 Grade 3B

SOMFIRE WITH SUBMERSIBLE ELECTRIC PUMP ID6 L
UNI EN 12845

SUBMERSIBLE CENTRIFUGAL PUMP

COOLING CHAMBER

KEY

NID	Nom. Intake Diameter
NDD	Nom. Delivery Diameter
NCD	Nom. Column Diameter
NFTD	Nom. Flow Test Diameter

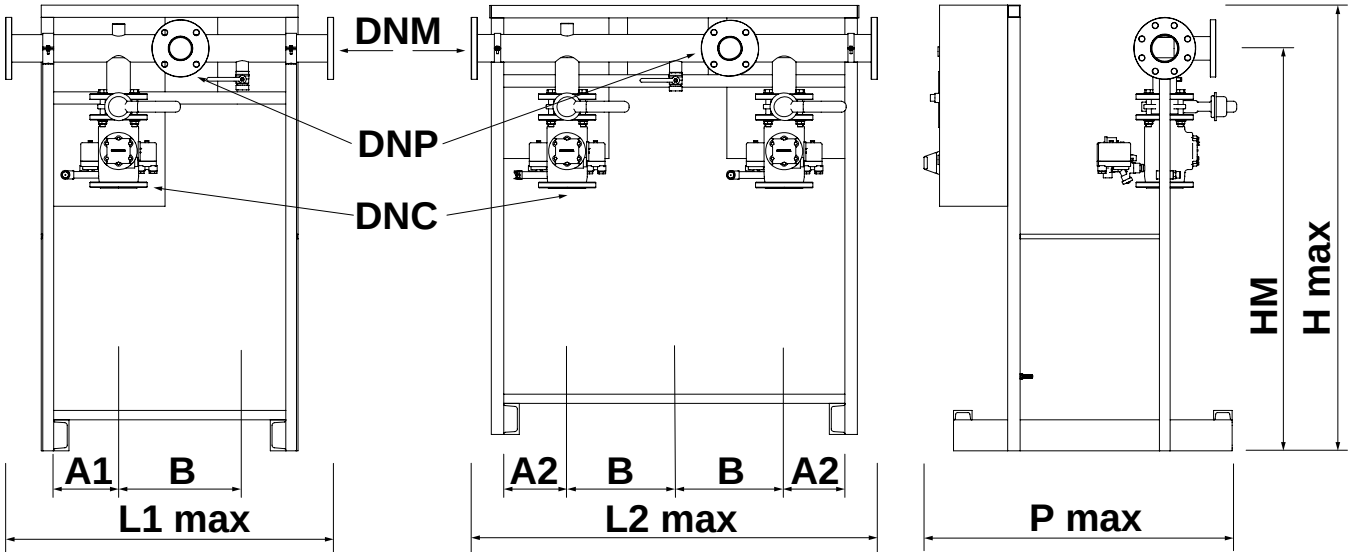

DIMENSIONS AND WEIGHTS OF SOMFIRE WITH ELECTRIC PUMPS ID6 L

Jockey pumps on page 39

Q max	PRODUCT CODE ID6 L				Power Pump	DNM	NFTD	HM	A1	A2	B	H max	L1 max	L2 max	P max	Weight 1E	Weight 2E
m³/h	COMP..	Quantity pumps	ID Pump	DNC	kW Electrical	Ø	Ø	mm	mm	mm	mm	mm	mm	mm	mm	kg	kg
≤ 40	G0S0	1E - 2E	845	050	7.5	65	50	1245	240	305	350	1440	830	1180	1020	215	350
	G0S0	1E - 2E	842	050	11	65	50	1245	240	305	350	1440	830	1180	1020	215	350
	G0S0	1E - 2E	844	050	15	65	50	1245	240	305	350	1440	830	1180	1020	215	350
> 40	G0S0	1E - 2E	845	065	7.5	80	65	1310	240	305	350	1440	830	1180	1025	215	350
	G0S0	1E - 2E	842	065	11	80	65	1310	240	305	350	1440	830	1180	1025	215	350
	G0S0	1E - 2E	844	065	15	80	65	1310	240	305	350	1440	830	1180	1025	215	350

Fire-fighting units catalogue - Edition: September-2021

SOMFIRE WITH SUBMERSIBLE ELECTRIC PUMP ID6 65
UNI EN 12845

PERFORMANCE RANGE

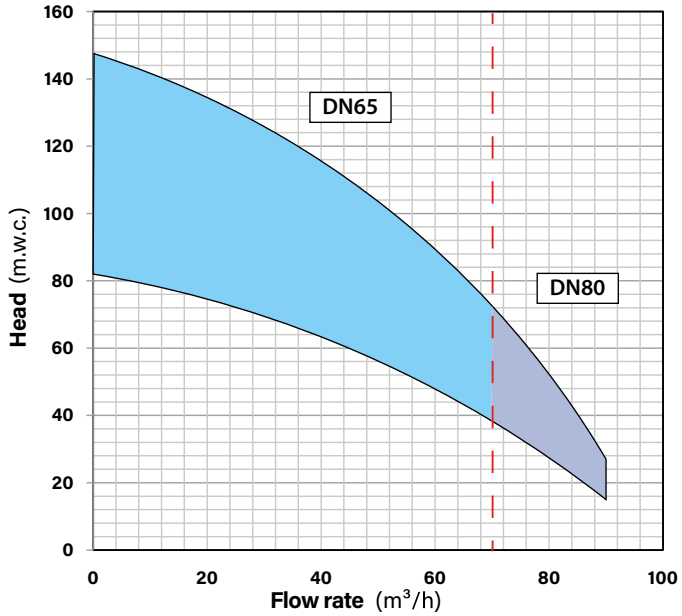

PRO ELECTRIC

GSM

SUBMERSIBLE CENTRIFUGAL PUMP

Multistage submersible centrifuge with motor connection according to NEMA standard.

- Body: Radial
- Impeller: Thermoplastic resin
- Shaft: AISI 304 Stainless Steel

MOTOR

Three-phase asynchronous closed submersible IP68.
Power calculated based on the power absorbed at the point of the characteristic curve **UNI EN 12845:2020 10.1**

HYDRAULIC PUMPS ID6 65 EFFICIENCY

Pump Model	ID Pump	Motor Electrical kW	Column Ø		Flow Rate - m³/h 0	36	42	48	54	60	66	72	78	84	90
ID6 65/5	861	11	65	H (mwc)	82	66	62	59	54	50	44	38	31	24	15
ID6 65/7	862	15	65		115	92	87	82	76	69	62	53	44	34	21
ID6 65/9	863	18.5	50		148	118	112	106	98	89	79	68	57	43	27

The values to the left of the reference refer to the maximum allowed delivery speed of 6 m/sec - The RED values entail speeds higher than 6 m/sec - The Values with GREY background indicate NPSH-R > 5m values.
For installations in HHS-HHP systems, contact our technical department. Nominal hydraulic characteristics of flow rate and head at the pump inlet, with performance tolerances according to UNI EN ISO 9906:2012 Grade 3B

SOMFIRE WITH SUBMERSIBLE ELECTRIC PUMP ID6 65
UNI EN 12845

SUBMERSIBLE CENTRIFUGAL PUMP

COOLING CHAMBER

KEY

NID	Nom. Intake Diameter
NDD	Nom. Delivery Diameter
NCD	Nom. Column Diameter
NFTD	Nom. Flow Test Diameter

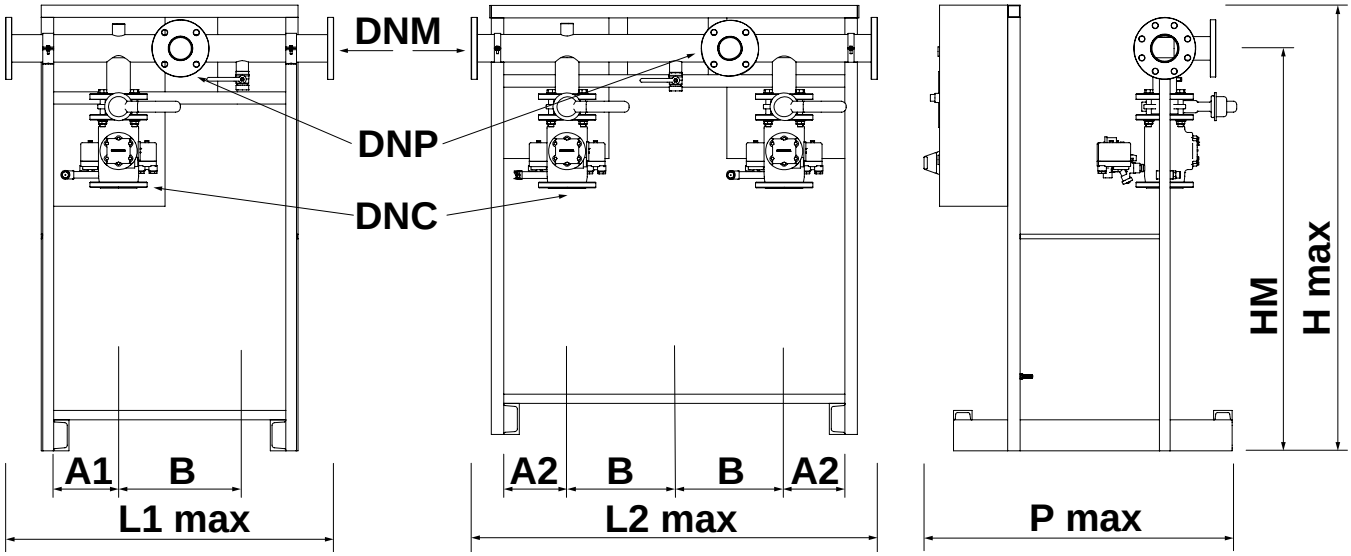

DIMENSIONS AND WEIGHTS OF SOMFIRE WITH ELECTRIC PUMPS ID6 65

Jockey pumps on page 39

Q max	PRODUCT CODE ID6 65				Power Pump	DNM	NFTD	HM	A1	A2	B	H max	L1 max	L2 max	P max	Weight 1E	Weight 2E
m³/h	COMP..	Quantity pumps	ID Pump	DNC	kW Electrical	Ø	Ø	mm	mm	mm	mm	mm	mm	mm	mm	kg	kg
≤ 70	G0S0	1E - 2E	861	065	11	80	65	1310	250	305	350	1440	830	1180	1025	220	370
	G0S0	1E - 2E	862	065	15	80	65	1310	250	305	350	1440	830	1180	1025	225	390
	G0S0	1E - 2E	863	065	18.5	80	65	1310	250	305	350	1440	830	1180	1025	225	390
> 70	G0S0	1E - 2E	861	080	11	100	80	1260	250	310	350	1440	930	1180	1070	230	370
	G0S0	1E - 2E	862	080	15	100	80	1260	250	310	350	1440	930	1180	1070	230	390
	G0S0	1E - 2E	863	080	18.5	100	80	1260	250	310	350	1440	930	1180	1070	235	390

The technical data are not binding and can be modified without prior notice | The images are indicative and not binding

SOMFIRE WITH SUBMERSIBLE ELECTRIC PUMP IDS8 NA
UNI EN 12845

PRO ELECTRIC

GSM

PERFORMANCE RANGE

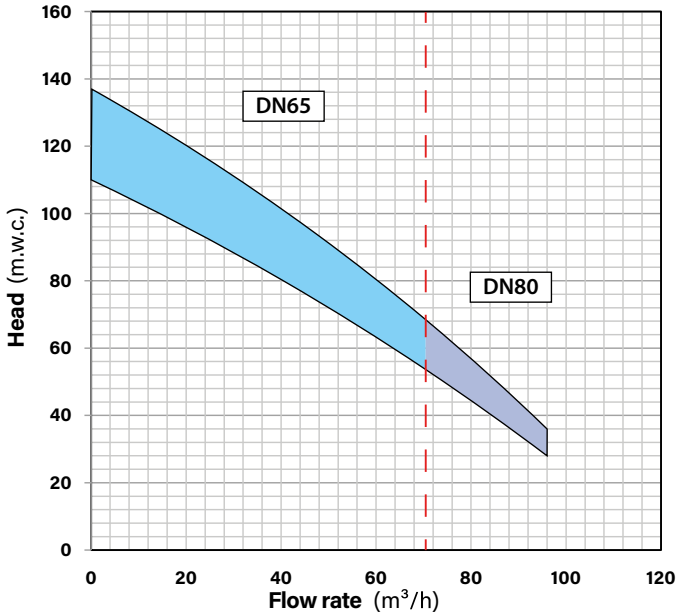

SUBMERSIBLE CENTRIFUGAL PUMP

Multistage submersible centrifuge with motor connection according to NEMA standard.

- Body: Radial
- Impeller: Thermoplastic resin
- Shaft: AISI 304 Stainless Steel

MOTOR

Three-phase asynchronous closed submersible IP68.
Power calculated based on the power absorbed at the point of the characteristic curve **UNI EN 12845:2020 10.1**

HYDRAULIC PUMPS IDS8 NA EFFICIENCY

Pump Model	ID Pump	Motor Electrical kW	Column Ø		Flow Rate - m³/h 0	30	36	42	48	54	60	66	72	78	84	90	96
IDS8 NA/4	881	15	80	H (mwc)	110	88	84	79	75	70	65	60	54	48	41	35	28
IDS8 NA/5	882	18.5	50		137	110	104	98	93	87	81	74	67	59	51	43	35

The values to the left of the reference refer to the maximum allowed delivery speed of 6 m/sec - The RED values entail speeds higher than 6 m/sec - The Values with GREY background indicate NPSH-R > 5m values.
For installations in HHS-HHP systems, contact our technical department. Nominal hydraulic characteristics of flow rate and head at the pump inlet, with performance tolerances according to UNI EN ISO 9906:2012 Grade 3B

SOMFIRE WITH SUBMERSIBLE ELECTRIC PUMP IDS8 NA
UNI EN 12845

SUBMERSIBLE CENTRIFUGAL PUMP

COOLING CHAMBER

KEY

NID	Nom. Intake Diameter
NDD	Nom. Delivery Diameter
NCD	Nom. Column Diameter
NFTD	Nom. Flow Test Diameter

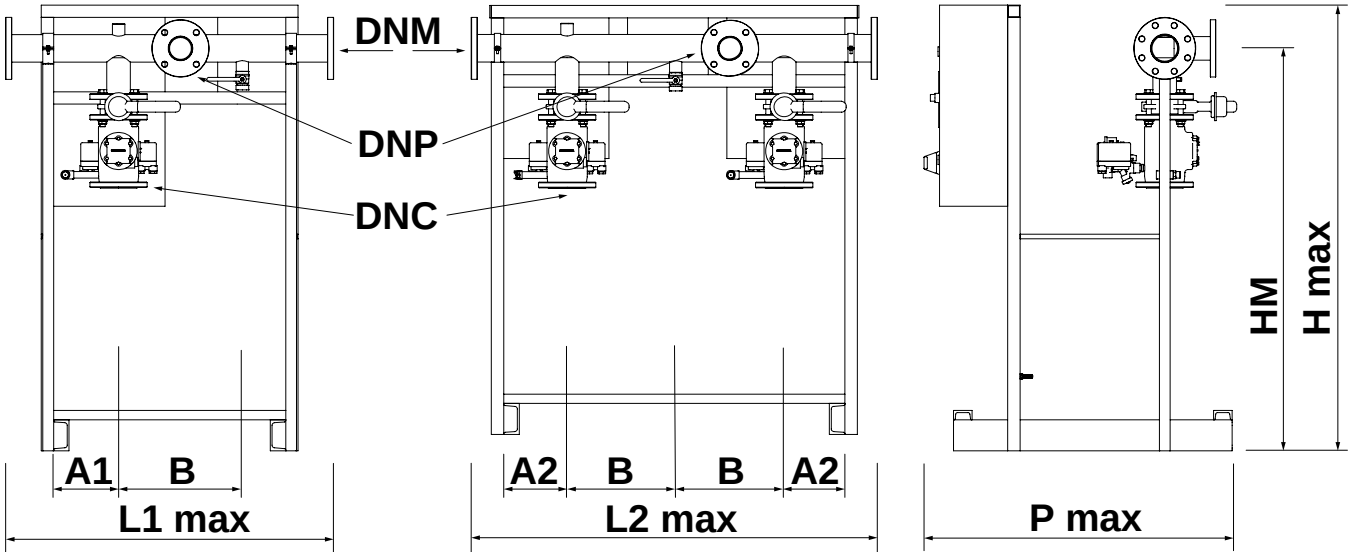

DIMENSIONS AND WEIGHTS OF SOMFIRE WITH ELECTRIC PUMPS IDS8 NA

Jockey pumps on page 39

Q max	PRODUCT CODE IDS8 NA				Power Pump	DNM	NFTD	HM	A1	A2	B	H max	L1 max	L2 max	P max	Weight 1E	Weight 2E
m³/h	COMP..	Quantity pumps	ID Pump	DNC	kW Electrical	Ø	Ø	mm	mm	mm	mm	mm	mm	mm	mm	kg	kg
≤70	G0S0	1E - 2E	881	065	15	80	65	1310	240	305	350	1440	830	1180	1025	220	370
	G0S0	1E - 2E	882	065	18.5	80	65	1310	240	305	350	1440	830	1180	1025	225	390
>70	G0S0	1E - 2E	881	080	15	100	80	1260	250	310	350	1440	930	1180	1070	230	370
	G0S0	1E - 2E	882	080	18.5	100	80	1260	250	310	350	1440	930	1180	1070	235	390

Fire-fighting units catalogue - Edition: September-2021

SOMFIRE WITH SUBMERSIBLE ELECTRIC PUMP IDS8 NB
UNI EN 12845

PRO ELECTRIC

GSM

PERFORMANCE RANGE

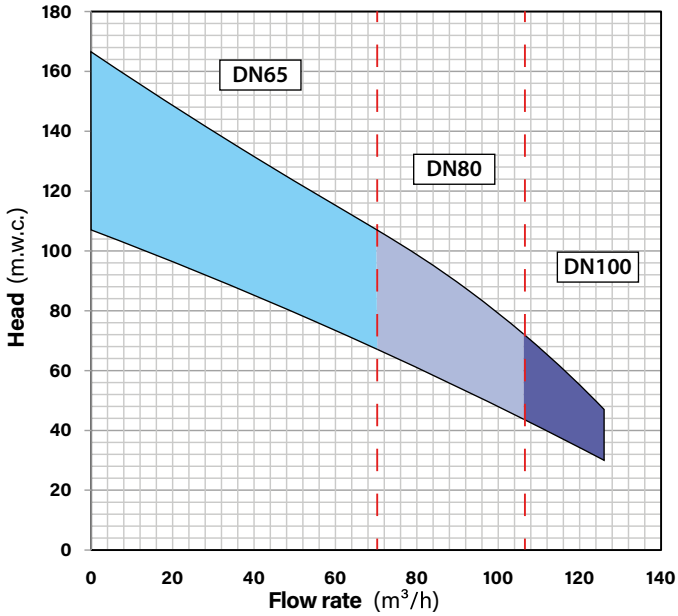

SUBMERSIBLE CENTRIFUGAL PUMP

Multistage submersible centrifuge with motor connection according to NEMA standard.

- Body: Radial
- Impeller: Thermoplastic resin
- Shaft: AISI 304 Stainless Steel

MOTOR

Three-phase asynchronous closed submersible IP68.
Power calculated based on the power absorbed at the point of the characteristic curve **UNI EN 12845:2020 10.1**

HYDRAULIC PUMPS IDS8 NB EFFICIENCY

Pump Model	ID Pump	Motor Electrical kW	Column Ø		Flow Rate - m³/h 0	48	54	60	66	72	78	84	90	96	108	120	126
IDS8 NB/4	901	18.5	65	H (mwc)	107	81	78	74	71	68	65	61	58	54	45	35	30
IDS8 NB/5	902	30	65		134	101	97	93	89	85	81	76	72	67	57	44	38
IDS8 NB/6	903	30	80		166	125	120	115	110	105	100	95	89	83	70	55	47

The values to the left of the reference refer to the maximum allowed delivery speed of 6 m/sec - The RED values entail speeds higher than 6 m/sec - The Values with GREY background indicate NPSH-R > 5m values.
For installations in HHS-HHP systems, contact our technical department. Nominal hydraulic characteristics of flow rate and head at the pump inlet, with performance tolerances according to UNI EN ISO 9906:2012 Grade 3B

SOMFIRE WITH SUBMERSIBLE ELECTRIC PUMP IDS8 NB
UNI EN 12845

SUBMERSIBLE CENTRIFUGAL PUMP

COOLING CHAMBER

KEY

NID	Nom. Intake Diameter
NDD	Nom. Delivery Diameter
NCD	Nom. Column Diameter
NFTD	Nom. Flow Test Diameter

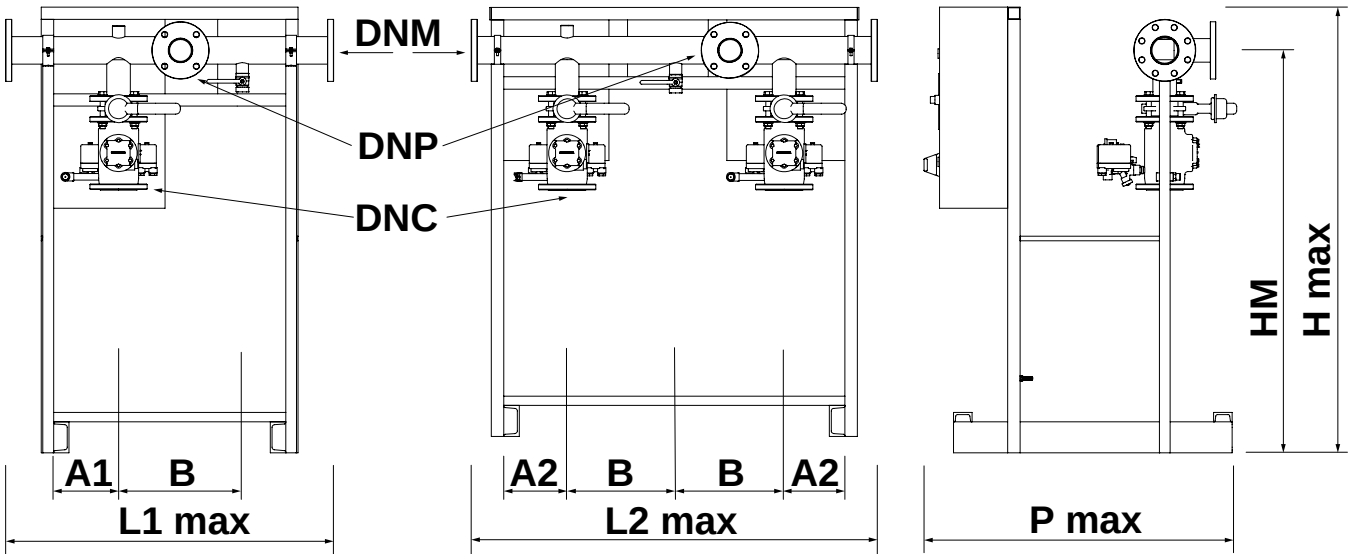

DIMENSIONS AND WEIGHTS OF SOMFIRE WITH ELECTRIC PUMPS IDS8 NB

Jockey pumps on page 39

Q max	PRODUCT CODE IDS8 NB				Power Pump	DNM	NFTD	HM	A1	A2	B	H max	L1 max	L2 max	P max	Weight 1E	Weight 2E
m³/h	COMP..	Quantity pumps	ID Pump	DNC	kW Electrical	Ø	Ø	mm	mm	mm	mm	mm	mm	mm	mm	kg	kg
≤70	G0S0	1E - 2E	901	065	18.5	80	65	1310	250	305	350	1440	830	1180	1025	220	370
	G0S0	1E - 2E	902 - 903	065	30	80	65	1310	250	305	350	1440	830	1180	1025	225	390
>70	G0S0	1E - 2E	901	080	18.5	100	80	1260	250	310	350	1440	930	1180	1070	230	370
	G0S0	1E - 2E	902 - 903	080	30	100	80	1260	250	310	350	1440	930	1430	1100	235	390
>105	G0S0	1E - 2E	901	100	18.5	125	100	1260	250	400	350	1440	930	1430	1070	230	370
	G0S0	1E - 2E	902 - 903	100	30	125	100	1260	250	400	350	1440	930	1430	1100	235	390

Fire-fighting units catalogue - Edition: September-2021

SOMFIRE WITH SUBMERSIBLE ELECTRIC PUMP IDS8 NC
UNI EN 12845

PERFORMANCE RANGE

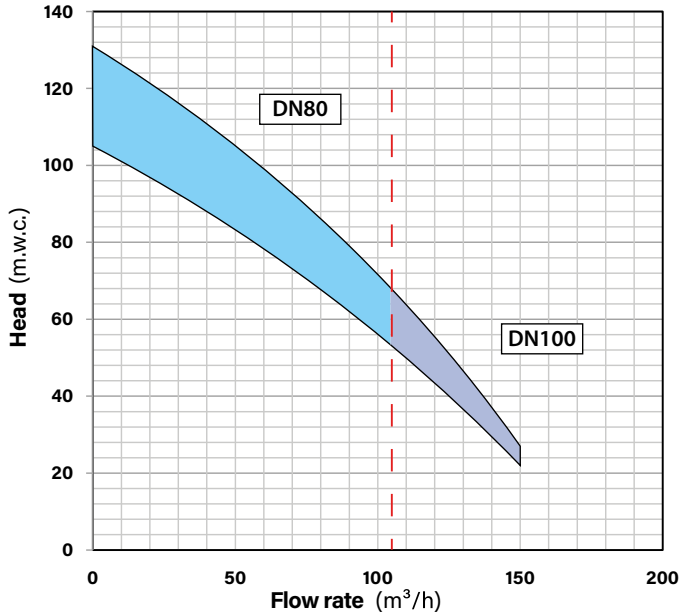

PRO ELECTRIC

GSM

SUBMERSIBLE CENTRIFUGAL PUMP

Multistage submersible centrifuge with motor connection according to NEMA standard.

- Body: Radial
- Impeller: Thermoplastic resin
- Shaft: AISI 304 Stainless Steel

MOTOR

Three-phase asynchronous closed submersible IP68.
Power calculated based on the power absorbed at the point of the characteristic curve **UNI EN 12845:2020 10.1**

HYDRAULIC PUMPS IDS8 NC EFFICIENCY

Pump Model	ID Pump	Motor Electrical kW	Column Ø		Flow Rate - m³/h 0	72	78	84	90	96	108	120	126	132	150
IDS8 NC/4	921	22	80	H (mwc)	105	73	70	66	63	59	51	44	39	35	22
IDS8 NC/5	922	30	80		131	91	87	83	79	74	64	55	49	44	27

The values to the left of the reference refer to the maximum allowed delivery speed of 6 m/sec - The RED values entail speeds higher than 6 m/sec - The Values with GREY background indicate NPSH-R > 5m values.
For installations in HHS-HHP systems, contact our technical department. Nominal hydraulic characteristics of flow rate and head at the pump inlet, with performance tolerances according to UNI EN ISO 9906:2012 Grade 3B

SOMFIRE WITH SUBMERSIBLE ELECTRIC PUMP IDS8 NC
UNI EN 12845

SUBMERSIBLE CENTRIFUGAL PUMP

COOLING CHAMBER

KEY

NID	Nom. Intake Diameter
NDD	Nom. Delivery Diameter
NCD	Nom. Column Diameter
NFTD	Nom. Flow Test Diameter

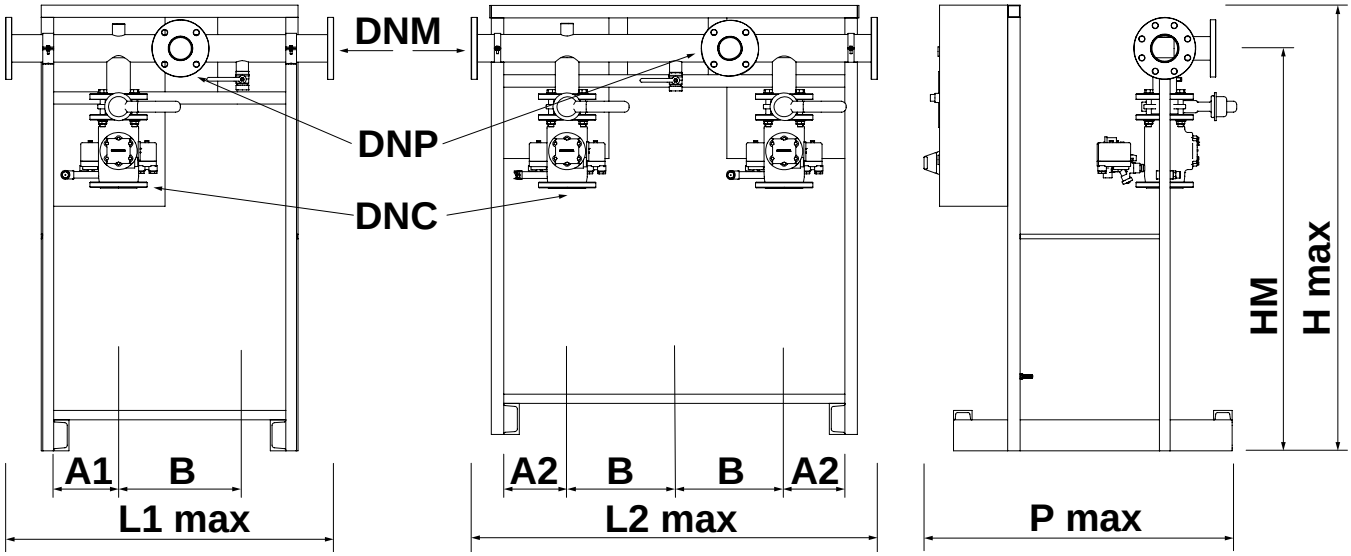

DIMENSIONS AND WEIGHTS OF SOMFIRE WITH ELECTRIC PUMPS IDS8 NC

Jockey pumps on page 39

Q max	PRODUCT CODE IDS8 NC				Power Pump	DNM	NFTD	HM	A1	A2	B	H max	L1 max	L2 max	P max	Weight 1E	Weight 2E
m³/h	COMP..	Quantity pumps	ID Pump	DNC	kW Electrical	Ø	Ø	mm	mm	mm	mm	mm	mm	mm	mm	kg	kg
≤105	G0S0	1E - 2E	921	080	22	100	80	1260	250	310	350	1440	930	1430	1070	220	370
	G0S0	1E - 2E	922	080	30	100	80	1260	250	310	350	1440	930	1430	1100	225	390
>105	G0S0	1E - 2E	921	100	22	125	100	1260	250	400	400	1440	930	1430	1070	230	370
	G0S0	1E - 2E	922	100	30	125	100	1260	250	400	400	1440	930	1430	1100	235	390

Fire-fighting units catalogue - Edition: September-2021

FAQ

SERIAL NO.

WHERE TO FIND THE SERIAL NUMBER IN FIREBOX ?

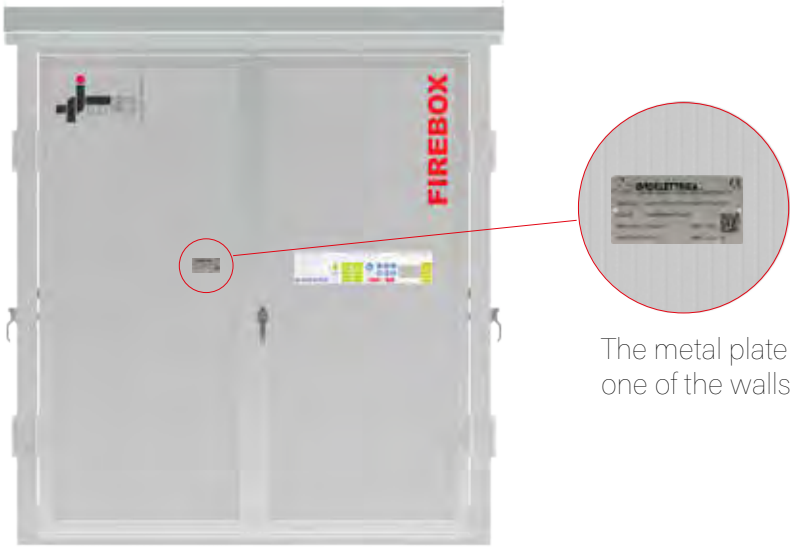

The metal plate is always applied to one of the walls of the box

WHERE DO I FIND THE SERIAL NUMBER IN THE UNITS ?

On the right side in the top left corner of the main pump panel

MORE INFORMATION
WWW.IDRO-ELETTRICA.IT

COMPONENTS
ACCESSORIES

ACCESSORIES

Accessories to complete the fire-fighting system according to UNI EN12845

Accessories UNI EN 12845	Point in the standard	Eurofire	Verticalfire	Eurofire SOM
Intake kit	10.6.2.1	✓	-	-
Flow meter	8.5.2	✓	✓	✓
Flow meter manifold	8.5.2	✓	✓	✓
Alarm panel (see page 232)	Annex I	✓	✓	✓
Diaphragm circuit flow indicator	10.5	✓	✓	✓
Diesel engine spare parts kit (*)	10.9.11	✓	✓	✓
Density meter (*)	10.9.8	✓	✓	✓
Diesel engine temperature and pressure detection panel (*)	20.2.2.5	✓	✓	✓
Foot valve complete with filter (**)	10.6.2.3	✓	-	-
Priming tank (**)	10.6.2.4	✓	-	-
Main submersible electric pumps cooling chambers		-	-	✓

OPTIONAL

Optional extras that can be used inside the fire-fighting system

Optional UNI EN 12845		Eurofire	Verticalfire	Eurofire SOM
Water/water heat exchanger for diesel engine (*)		✓	✓	-
Anti-vortex plate		✓	✓	-
Water reserve filling valve		✓	✓	✓
Water reserve level indicator		✓	✓	✓
On/off microswitches on the main pump valves		✓	✓	✓
Visual acoustic siren		✓	✓	✓
Shut-off throttle valves		✓	✓	✓
Water reserve level alarm panel		✓	✓	✓

(*) Only in the case of a diesel engine
(**) Only for negative suction head hydraulic set ups

Fire-fighting units catalogue - Edition: September-2021

The technical data are not binding and can be modified without prior notice | The images are indicative and not binding

INTAKE KIT

The EN 12845 fire-fighting pressurisation units can be completed on the intake side of the main and reserve pumps with adequate kits, which depend on the requirements of UNI EN12845 10.5-10.6. The smaller diameter of the eccentric cone DN1 is linked to the intake diameter of the pump, whereas DN2 is that which is necessary to respect the maximum speed in the intake pipe at the maximum required flow rate (max 1.5 m/s for the DN2 negative suction head minimum 80 mm, and 1.8 m/s for the DN2 positive suction head minimum 65 mm).

NEGATIVE SUCTION HEAD VERSION

- Eccentric cone with horizontal top part and an opening angle less than 20° UNI EN 10.6.2.1. The cone is made without edges and obstructions, with cross-sections that reduce turbulence and minimise intake pressure drops
- Vacuum gauge with valve.

DN1 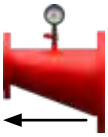 DN2

Code	Can be combined with units	DN1	DN2	Gauge	QMAX (m3/h)
049472BG	32-200/250	50	80	103	28
049472DG	32-200/250	50	100	175	46
049472DFG	32-200/250	50	125	195	73
049472EG	40-200/315 50-160/250	65	80	110	28
049472FG	40-200/315 50-160/250	65	100	135	46
049472HG	40-200/315 50-160/250	65	125	209	73
049472HUG	40-200/315 50-160/250	65	150	289	108
049472HWG	40-200/315 50-160/250	65	200	452	188
049472IG	65-200/315	80	100	116	46
049472LG	65-200/315	80	125	172	73
049472NG	65-200/315	80	150	249	108
049472PG	65-200/315	80	200	391	188
049472PFG	65-200/315	80	250	545	298
049472QG	80-200/315	100	125	115	73
049472RG	80-200/315	100	150	194	108
049472TG	80-200/315	100	200	323	188
049472VG	80-200/315	100	250	476	298
049472VL	80-200/315	100	300	610	423
049472WG	100-200/315	125	150	124	108
049472XG	100-200/315	125	200	254	188
049473BG	100-200/315	125	250	400	298
049473BN	125-250/315	125	300	546	423
049473DG	125-250/315	150	200	175	188
049473FG	125-250/315	150	250	320	298
049473HG	125-250/315	150	300	470	423
049473KG	125-250/315	150	350	560	570
049473KH	125-250/315	150	400	694	720
049473KL	150-315/500	200	250	206	280
049473KN	150-315/500	200	300	324	507
049473LG	150-315/500	200	350	415	570
049473LI	150-315/500	200	400	556	720

POSITIVE SUCTION HEAD VERSION

- Throttle shut-off valve on the side with the larger diameter, with a lever handle for DN ≤100, with a handwheel and reducer for DN≥125;
- Eccentric cone with horizontal top part and an opening angle less than 20° UNI EN 10.6.2.1. The cone is made without edges and obstructions, with cross-sections that reduce turbulence and minimise intake pressure drops
- Vacuum gauge with valve.

DN1 DN2

Code	Can be combined with units	DN1	DN2	Gauge	QMAX (m3/h)
049472A*	32-200/250	50	65	154	23
049472B*	32-200/250	50	80	150	33
049472D*	32-200/250	50	100	227	56
049472E*	40-200/315 50-160/250	65	80	157	33
049472F*	40-200/315 50-160/250	65	100	187	56
049472HR	40-200/315 50-160/250	65	125	266	87
049472HU	40-200/315 50-160/250	65	150	346	130
049472HWQ	40-200/315 50-160/250	65	200	513	226
049472LR	65-200/315	80	125	229	87
049472N	65-200/315	80	150	306	130
049472P	65-200/315	80	200	452	226
049472PD	65-200/315	80	250	606	357
049472QR	80-200/315	100	125	172	87
049472R	80-200/315	100	150	251	130
049472T	80-200/315	100	200	384	226
049472V	80-200/315	100	250	537	357
049472W	100-200/315	125	150	181	130
049472X	100-200/315	125	200	315	226
049473B	125-250/315	125	250	461	357
049473BL	125-250/315	125	300	624	507
049473D	125-250/315	150	200	236	226
049473F	125-250/315	150	250	381	357
049473H	125-250/315	150	300	548	507
049473K	125-250/315	150	350	646	640
049473KM	150-315/500	200	300	402	507
049473L	150-315/500	200	350	501	640
049473LH	150-315/500	200	400	658	850

Depending on the pump model (E.g. 65-200), the flow rate (E.g. Q = 60 m^3/h) and the hydraulic set up (E.g. positive suction head), the adequate kit will be selected (E.g.cod. 049472LR for 65-200, which can be used up to Q max 87 m^3/h and having diameters 80/125

The technical data are not binding and can be modified without prior notice | The images are indicative and not binding

FLOW METER

Flow meter with delayed reading for vertical/ horizontal installation.
Accuracy ~ 5% on full scale value. Internal recirculation circuit with self-cleaning function
Allows the flow rate of the main pumps to be measured during testing and periodic checks UNI EN 12845 20.3.2.5 – 20.3.4.2

Code	m³/h	DN	Gauge
005950•	32	40	43
005951•	70	50	43
005952•	110	65	43
005953•	180	80	43
005954•	250	100	43
005955•	400	125	43
005956D•	520	150	43
005957•	900	200	43

REDUCED TEE FITTING

Connection fitting that allows the connection of:

- Jockey pump delivery piping
- Piping to the flow meter

Code	DN	DN
030301C	65	40
030300	65	50
030302	80	65
030303	80	80
030304	100	80
030306	125	100
030307	125	125
030307H	150	100
030308	150	125
030309F	200	125
030310	200	150
030312	250	200

UPSTREAM PIPE KIT OF THE FLOW METER

Kit that allows the flow meter to be connected on the delivery manifold of the unit, which has a diameter similar to that of the flow meter itself and that is long enough to ensure no turbulence that would falsify the flow rate reading.

Complete with:
- Upstream shut-off valve
- Hardware
- Gaskets

Straight version code	DN
049178V	40
049179	50
049180	65
049181	80
049182	100
049183	125
049186	150
049187	200

Curved version code	DN
049178VH	40
049179H	50
049180H	65
049181H	80
049182H	100
049183H	125

DOWNSTREAM PIPE KIT OF THE FLOW METER

Kit that allows you to adjust the flow of the flow meter, thereby allowing a correct measurement. With a diameter similar to that of the flow meter and long enough to ensure no turbulence that would falsify the flow rate reading.

Complete with:
- Downstream control valve
- Hardware
- Gaskets

Code	DN	DN
050848A5	40	1"½
050848B	50	2"
050848D	65	2"½
050848F	80	3"
050848H	100	100
050848M	125	125
050848P	150	150
050848R	200	200
050848U	250	250

The technical data are not binding and can be modified without prior notice | The images are indicative and not binding

HEAT EXCHANGER AND DIAPHRAGM FLOW DISPLAYS

To be fitted on the diaphragm circuit (½) when it is not possible to set up an open drain circuit, and to be fitted on the supply circuit of the heat exchanger (1") of the diesel engine.

Code	Description
005888•	½' flow indicator
005890•	1' flow indicator

CAST IRON FLANGED FOOT VALVE

Check valve with body and shutter in cast iron G25, STAINLESS steel spring and gasket in NBR 80SH. The particular construction allows low pressure drops.

Operating limits:

- Temperature –10°C + 100°C
- Max operating pressure 16 bar

Code	DN	PN	Gauge
003205•	50	16	100
003206•	65	16	120
003207•	80	16	140
003208•	100	16	170
003209•	125	16	200
003210•	150	16	230
003211•	200	10	289
003211A•	250	10	354
003211B•	300	10	396

FILTER FOR CHECK VALVE IN GALVANISED STEEL

Construction with 2mm pitch galvanised mesh and coupling flange

Code	DN	Gauge
003211H	50	80
003211I	65	100
003211M•	80	120
003211N•	100	150
003211O•	125	175
003211P•	150	200
003211P00•	200	256
003211P01•	250	306
003211P03•	300	366

ANTI-VORTEX DEVICE COMPLETE WITH FOOT VALVE, PLATE AND FILTER

Complete anti-vortex kit to be placed inside the intake water reserve and fitted on the pipe to allow a greater effective accumulation capacity of the water reserve itself (UNI EN 9.3.5).

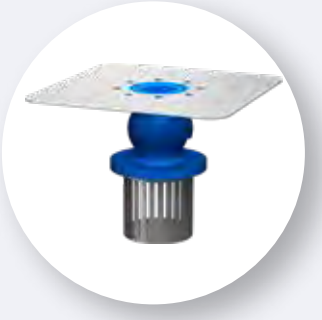

Code	DN	Dimensions (mm)
049473N	65	600x600x3
049473P	80	600x600x3
049473R	100	600x600x3
049473T	125	600x600x3
049473V	150	600x600x3
049473X	200	1000x1000x3
049473Z	250	1000x1000x3
049473Z1	300	1200x1200x3

PRIMING TANK

Priming tank (500-litre capacity) to be used in negative suction head installations to keep the pump body and the intake pipe always full of water, even if there are leaks through the foot valve. Every pump must have its own independent priming tank, at a higher level than the pump.

Code	Description
049495A	500 l + Stor. polyethylene priming tank EN12845
049495B	500 l + Stor. galvanized sheet metal priming tank EN12845

Fire-fighting units catalogue - Edition: September-2021

DIESEL ENGINE SPARE PARTS KIT

The kit consists of:

- Two diesel filters with gaskets
- Two oil filters with gaskets
- Two sets of belts
- Two nozzles for the injectors
- A complete range of fittings, gaskets and hoses for the oil and fuel circuit

Code	Engine Model
049791•	Lombardini 15LD440
049792•	Lombardini 15LD500
049793•	Lombardini 9LD625/2
049794•	Lombardini 11LD626/3
049795	Lombardini 12LD477/2
049796•	Lombardini 25LD425/2
049796S•	Kohler KDI1903M
049797•	Kohler KDI2504M
049772•	VM D703E0 / D703TE0
049774•	VM D754TPE2
049776•	VM D756IPE2
049777	Clarke JU4H-NL54
049779	Clarke JU6H-NLM4 / NL94
049701	Iveco N67MNTF40 / 41 / 42
049702	Iveco N45MNTF / MNSF

MANUAL PUMP FOR DIESEL

Manual pump to top-up the diesel in the tank. PVC pump already included in all systems above 17.5 kW

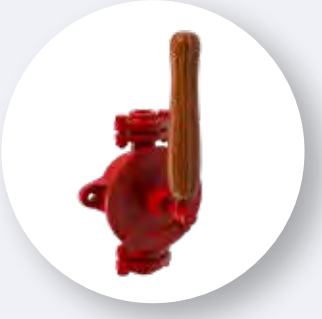

Code	Description
049694T	Manual PVC pump
049694TH	Manual cast iron pump

DENSITY METER

Adequate device to check the electrolyte density inside the start-up batteries of the diesel engine (sec. 10.9.8)

Code	Description
RIC000040•	Density meter

DOUBLE CIRCUIT FOR HEAT EXCHANGER

The circuit is supplied by the water drawn immediately downstream of the pump delivery outlet, without any shut-off device

The following are fitted on every supply pipe of the exchanger:

- A self-cleaning cartridge filter complete with 2 pressure gauges
- An adjustable pressure reducer
- A pressure gauge placed downstream of the pressure reducer

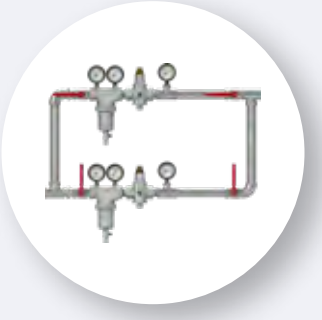

Code	Engine Model
049474W*	Double circuit kit for heat exchanger

* Supplied assembled

ADDITIONAL SILENCER FOR DIESEL ENGINE

Absorption type silencers, with fibre sound-absorbing material

Component to be used if the noise from the Diesel engine needs to be attenuated

Code	Combined motor power
049800B	From 0 to 12 kw
049800D	From 12 to 23 kw
049800F	From 23 to 38 kw
049800H•	From 38 to 58 kw
049800L	From 58 to 85 kw
049800N•	From 85 to 125 kw
049800S	From 188 to 294

Fire-fighting units catalogue - Edition: September-2021

The technical data are not binding and can be modified without prior notice | The images are indicative and not binding

COMPLETE SPRINKLER KIT

Sprinkler Kit for Fire Protection of the Water System UNI EN 12845:2020 10.3.2
The kit consists of:

- Sprinkler with standard 141°C response bulb, pendent with protection cage.
- Flow switch Ø 2" to detect sprinkler operation, with CE marking and compliant with EN 12259-5
- Test and drain circuit with nominal diameter > 15mm

Code	Description
049500M	Sprinkler kit complete with flow switch

ANTI-VIBRATION JOINT IN AISI 321

Anti-vibration joint with fixed flange connections, entirely made of AISI 321 steel.
The joint must have a diameter that respects the value of the maximum speed of the water in the intake pipes UNI EN 12845:2020 10.6.2.1

Code	DN	PN	Gauge
003249M	DN 32	40	95
003249N	DN 40	40	95
003249P	DN 50	40	105
003249Q	DN 65	40	115
003249R	DN 80	40	130
003249S	DN 100	40	135
003249T	DN 125	40	170
003249U	DN 150	40	180
003249V	DN 200	40	205
003249W	DN 250	40	240
003249X	DN 300	40	260
003249Y	DN 350	40	265

WATER VALVE

Diaphragm valve to fill the water reserve. The valve is found on the inlet pipe to the water reserve and is actuated by a float that is fitted internally.

Code	Description
003373LS	1" water valve
003373M	2" water valve
003373MK	2"½ water valve
003373N	3" water valve

COOLING CHAMBERS FOR MAIN SUBMERSIBLE ELECTRIC PUMPS

Of adequate size for the submersible pump, it improves the cooling effect on the motor when the pump is installed in the water reserve.

Code	DN	Length (mm)
049400	4"	700
049401CE	6"	1140
049401DE	8"	1200
049401H	10"	1400
049401DH	8"	1400
049401N	12"	1700

VISUAL ACOUSTIC SIREN

Visual acoustic siren with lamp and siren with 100 dB sound (at one metre), IP 30

Code	Description
020099H•	Visual acoustic siren 12V
020099A•	Visual acoustic siren 24V
020099C•	Visual acoustic siren 230V

FLANGED CLAPET VALVES

Inspectionable clapet check valve, with reduced pressure drops, body and shutter in G25 cast iron, head sealing ring in rubber.
Operating limits:

- Maximum temperature + 200°C
- Max operating pressure 16 bar

Code	DN	PN	Gauge
003375	40	16	180
003377	50	16	200
003379	65	16	240
003382	80	16	260
003383	100	16	300
003385	125	16	350
003387	150	16	400
003389•	200	16	500
003391•	250	16	600

Fire-fighting units catalogue - Edition: September-2021

WAFER THROTTLE VALVES

Padlockable throttle valves with lever control, with body and lens in cast iron, sleeve in EPDM, possibility of coupling with PN 6/10/16 flanges. Max operating pressure 16 bar

Code	DN	PN	Gauge
003266•	40	16	33
003266A•	50	16	43
003267•	65	16	46
003267A•	80	16	46
003268•	100	16	52
003268A	125	16	56
003269	150	16	56
003269A	200	16	60

WAFER THROTTLE VALVES WITH REDUCER

Padlockable throttle valves fitted with manual manoeuvre reducer, with body and lens in cast iron, sleeve in EPDM, possibility of coupling with PN 6/10/16 flanges. Max operating pressure 16 bar

Code	DN	PN	Gauge
003269G2	50	16	43
003269G3	65	16	46
003269G4	80	16	46
003269G5	100	16	52
003269G6	125	16	56
003269G7	150	16	56
003269G8	200	16	60
003269G9	250	16	68
003269G10	300	16	78

LUG THROTTLE VALVES

Padlockable throttle valves with lever control, with body and lens in cast iron, sleeve in EPDM, possibility of coupling with PN 6/10/16 flanges. Max operating pressure 16 bar

Code	DN	PN	Gauge
003269C2•	40	16	33
003269C3•	50	16	43
003269C4•	65	16	46
003269C5•	80	16	46
003269C6•	100	16	52
003269C7	125	16	56
003269C8	150	16	56
003269C9	200	16	60

LUG THROTTLE VALVES WITH MANUAL REDUCER

Padlockable throttle valves fitted with manual manoeuvre reducer, with body and lens in cast iron, sleeve in EPDM, possibility of coupling with PN 6/10/16 flanges. Max operating pressure 16 bar

Code	DN	PN	Gauge
003269GK•	65	16	46
003269GN•	80	16	46
003269GM•	100	16	52
003269GP•	125	16	56
003269GQ•	150	16	56
003269GR•	200	16	60
003269GS•	250	16	68
003269GT•	300	16	78

MICROSWITCH KIT FOR VALVES

Limit switch contacts for ON/OFF monitoring of the valve status.
(Excluding valves)

Code	Description
049206	Microswitch for handwheel valves
049206B	Microswitch for lever valves

LEVEL TRANSMITTER

Immersion silicon level transmitter, measuring range 0-10/20 m complete with cable.
Ideal for monitoring the water level inside the fire-fighting tank.

Code	Description
020239	Level probe 0-10m 4-20ma + 10mt cable
020239AK	Level probe 0-20m 4-20ma + 30mt cable

Fire-fighting units catalogue - Edition: September-2021

The technical data are not binding and can be modified without prior notice | The images are indicative and not binding

ELECTRICAL PANELS
FIRE PROTECTION

PANELS FOR ELECTRIC PUMP	PAGE 265
PANELS FOR MOTOR PUMP	PAGE 272
ALARM REPETITION PANELS	PAGE 267
ROOMS SERVICE PANELS	PAGE 264
PANELS FOR JOCKEY PUMPS	PAGE 240
UTILITY MANAGEMENT PANELS	PAGE 239
GSM KIT	PAGE 239

FIRE-FIGHTING CONTROL UNITS UNI EN 12845

iPRO

iPRO CONTROL

Control unit to manage and communicate type A and B alarms. Modbus/TCP management up to 8 control panels, maximum remote distance 800 m.

Manned room

iPRO ELECTRIC

Control unit for fire-fighting units with electric motors

iPRO DIESEL

Control unit for fire-fighting units with endothermic engines

The technical data are not binding and can be modified without prior notice | The images are indicative and not binding

EPRO ENERGY

Control unit for UPS management

The EPRO control unit has been specifically developed to be used in electrical panels to control fire-fighting pumping units, in accordance with UNI EN 12845, installed in UNI 11292 compliant rooms.

All the main data, related to the events of the fire-fighting pumping unit, are stored inside the control unit itself in chronological order and are available via Modbus TCP or USB port.

MAIN COMMON FEATURES

- Innovative design
- Simple and intuitive user friendly interface
- High resistance to vibrations
- 4.3" colour TFT LCD display
- 512 storable events and alarms
- 10/100 Mbps Ethernet port - Modbus TCP/IP
- Type "A" USB port to download saved data
- Jockey pump monitoring
- Water reserve level monitoring
- Valve position monitoring
- Sprinkler flow switch monitoring
- Local drain pump monitoring
- Ambient temperature visible on the display
- Local fan management
- Message screen
- Diesel engine tools screen

TECHNICAL DATA

IP55 protection
Operating temperature -10°C + 60°C
Max humidity 70%
Max output contacts flow rate: 5A 24V
Removable connection terminals 5.08/7.62 pitch
Max external panel dimensions 192 x 176 mm

PROGRAMMING MENU

Local Management
Pump Unit Management
System Management

LANGUAGES

Italian
English
French
Estonian
Latvian
Romanian

The technical data are not binding and can be modified without prior notice | The images are indicative and not binding

LIST OF COMMON ALARMS

- Pump running
- Start-up request
- Failed start-up
- Power failure
- Faulty control unit
- Pump not delivering
- Drain pump running
- Tripped local sprinkler
- Tripped Jockey pump circuit breaker
- Jockey pump prolonged operation
- Too many Jockey pump start-ups
- High water reserve level
- Low water reserve level
- Faulty water reserve sensor
- Abnormal water reserve level
- Abnormal valve position

LIST OF EPRO DIESEL ALARMS

- Low fuel level
- Low oil pressure
- High header temperature (air-cooled motors)
- High water temperature
- High oil temperature
- Faulty battery charger 1
- Faulty battery charger 2
- Faulty battery 1
- Faulty battery 2
- Interrupted pick-up
- Faulty oil heater
- Faulty battery charger 1 fuse
- Faulty battery charger 2 fuse
- Faulty emergency panel
- No exchanger flow

INTELLIGENT DATA MANAGEMENT

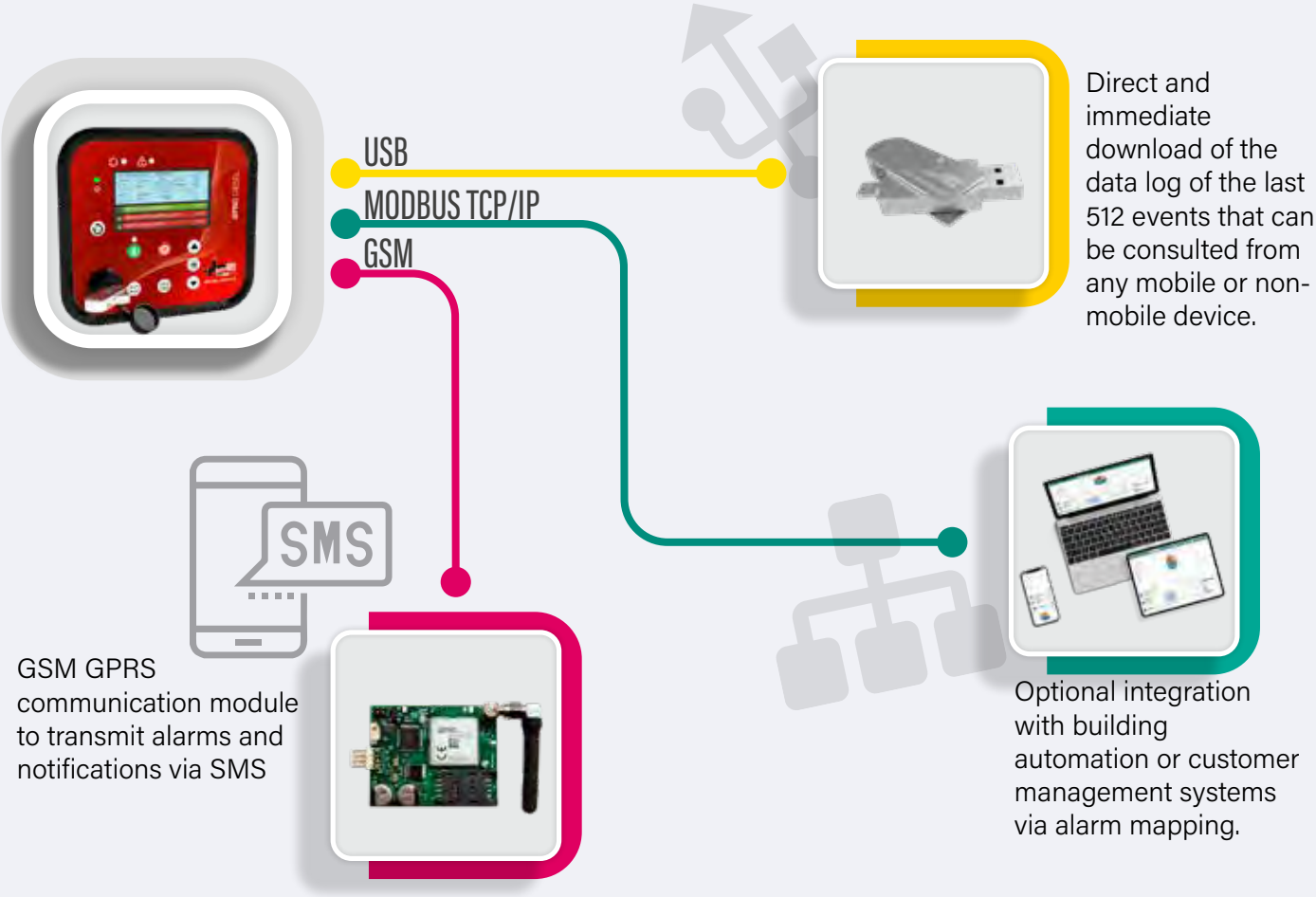

EPRO ELECTRIC

CONTROL PANEL UNI EN 12845 FOR MAIN ELECTRIC PUMP

Main features:

The EPRO Electric panel controls pumping units with Electric pumps, compliant with UNI EN 12845:2020.
EPRO Electric manages electric pumps with both direct and star-delta starting.
All the main data, related to the events of the fire-fighting pumping unit, are stored inside the control unit in chronological order and can be downloaded to a USB drive.
The EPRO family of devices also includes EPRO Diesel (Motor pump management panel), EPRO Control (Alarm repetition panel) and EPRO Energy (Emergency panel).

Advantages:

- Innovative design;
- Simple and intuitive user friendly interface with
- 4.3" colour TFT LCD display;
- Message screen
- High resistance to vibrations;
- 512 storable events and alarms;

Construction specifications:

- Metal box panel
- IP54 protection rating (IP55 or higher on request)
- Painted with epoxy polyester powders in RAL3000

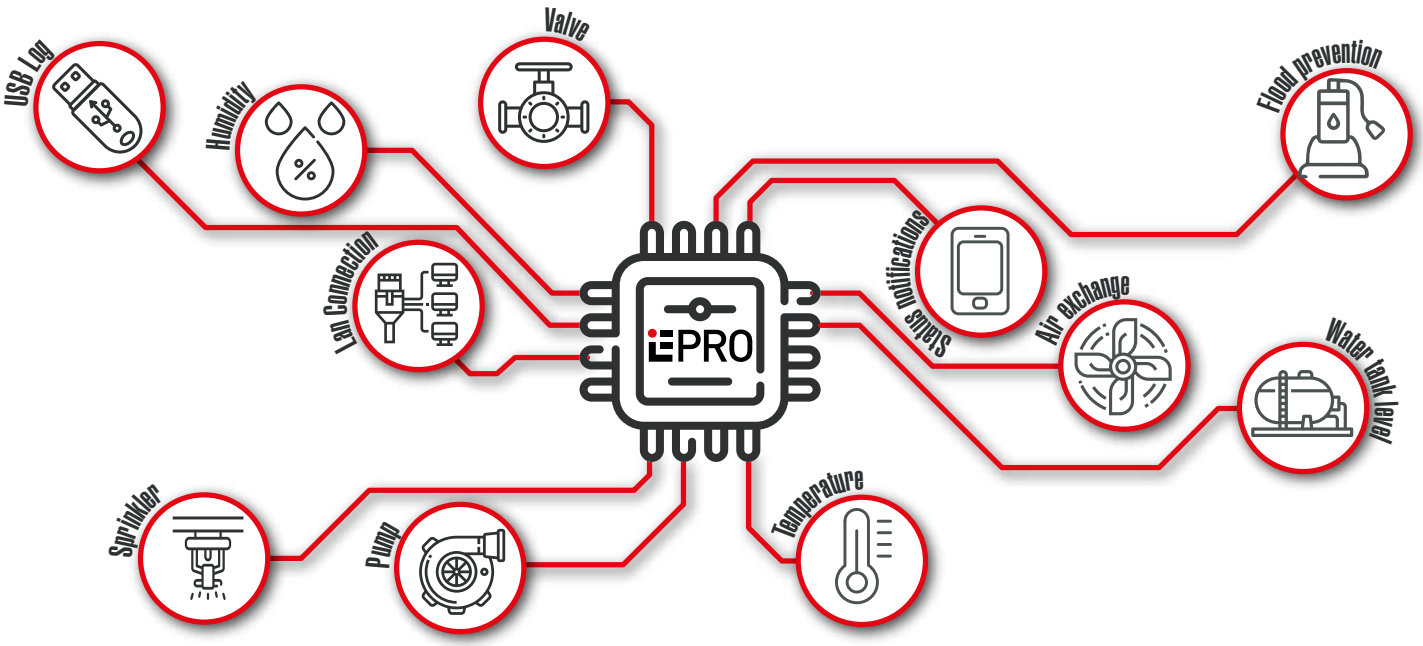

The technical data are not binding and can be modified without prior notice | The images are indicative and not binding

FIELDS OF APPLICATION

- SHOPPING CENTRES
- HOSPITALS
- INFRASTRUCTURES
- INDUSTRIES
- HOTEL COMPLEXES
- RESIDENTIAL
- CINEMAS AND THEATRES
- SCHOOLS

Main components:

- Power supply 3P+E 400V±10% 50/60Hz;
- Motor Inhibition Switch "0 – 1"
- 4-20 mA signal input from level transmitter (not included);
- Graphic LCD with icons and texts relating to the system status;
- 10/100 Mbps Ethernet port - Modbus TCP/IP;
- Type "A" USB port to download saved data;
- Jockey pump monitoring;
- Water reserve level monitoring;
- Valve position monitoring;
- Sprinkler flow switch monitoring;
- Local drain pump monitoring;
- Ambient temperature visible on the display;
- Operation LEDs, mains presence, mains absence, anomaly, power ON;
- AC3 sized contactors;
- Class II transformer;
- Motor protection fuses;
- Auxiliary protection fuses;
- General disconnector with door lock;
- Enclosure in metal material;
- Terminal block;
- User manual;
- Wiring diagram and EC declaration.

Direct start-up

Code	Power		Operating current
	kW	Hp	A
QUENEDI00002V2	0.37-2.2	0.5-3	1-1.6
QUENEDI00003	3	4	6.3-10
QUENEDI00004	4	5.5	9-14
QUENEDI00005V5	5.5	7.5	9-14
QUENEDI00007V5	7.5	10	13-18
QUENEDI00011	11	15	24-32
QUENEDI00015	15	20	28-40
QUENEDI00018V5	18.5	25	35-550

Star-Delta Starting

Code	Power		Operating current
	kW	Hp	A
QUENEST00007V5	7.5	10	15.5-25.9
QUENEST00009V2	9.2	12.5	15.5-25.9
QUENEST00011	11	15	15.5-25.9
QUENEST00015	15	20	24.1-39.7
QUENEST00018V5	18.5	25	34.5-56.9
QUENEST00022	22	30	34.5-56.9
QUENEST00030	30	40	48.3-72.4
QUENEST00037	37	50	60.3-86.2
QUENEST00045	45	60	79.3-112.1
QUENEST00055	55	75	103.4-141.4
QUENEST00075	75	100	120.7-163.8
QUENEST00090	90	122	129.3-215.5
QUENEST00110	110	150	155.2-258.6
QUENEST00132	132	180	206.9-344.8
QUENEST00160	160	220	310.3-517.2
QUENEST00200	200	280	310.3-517.2
QUENEST00250	250	320	-
QUENEST00315	315	420	-

The technical data are not binding and can be modified without prior notice | The images are indicative and not binding

EPRO DIESEL

CONTROL PANEL UNI EN 12845 FOR MAIN DIESEL PUMP

Main features:

The EPRO Diesel electrical panel controls pumping units with motor pumps, compliant with UNI EN 12845:2015. EPRO Diesel manages motor pumps with electrical fittings at both 12Vdc and 24Vdc. The simple and intuitive graphic interface allows 360° monitoring of all motor parameters. All the main data, related to the events of the fire-fighting pumping unit, are stored inside the control unit in chronological order and can be downloaded to a USB drive. The EPRO family of devices also includes EPRO Electric (Electric pump management panel), EPRO Control (Alarm repetition panel) and EPRO Energy (Emergency panel).

Advantages:

- 4.3" TFT LCD graphic display Internal "black box" memory to store 512 events
- Type "A" USB port for log download
- 10/100Mbps Ethernet port to communicate with Modbus TCP-IP protocol
- Pump set management Local management (fan, Jockey pump, valves,etc.)

Construction specifications:

- Metal box panel
- IP54 protection rating (IP55 or higher on request)
- Painted with epoxy polyester powders in RAL3000

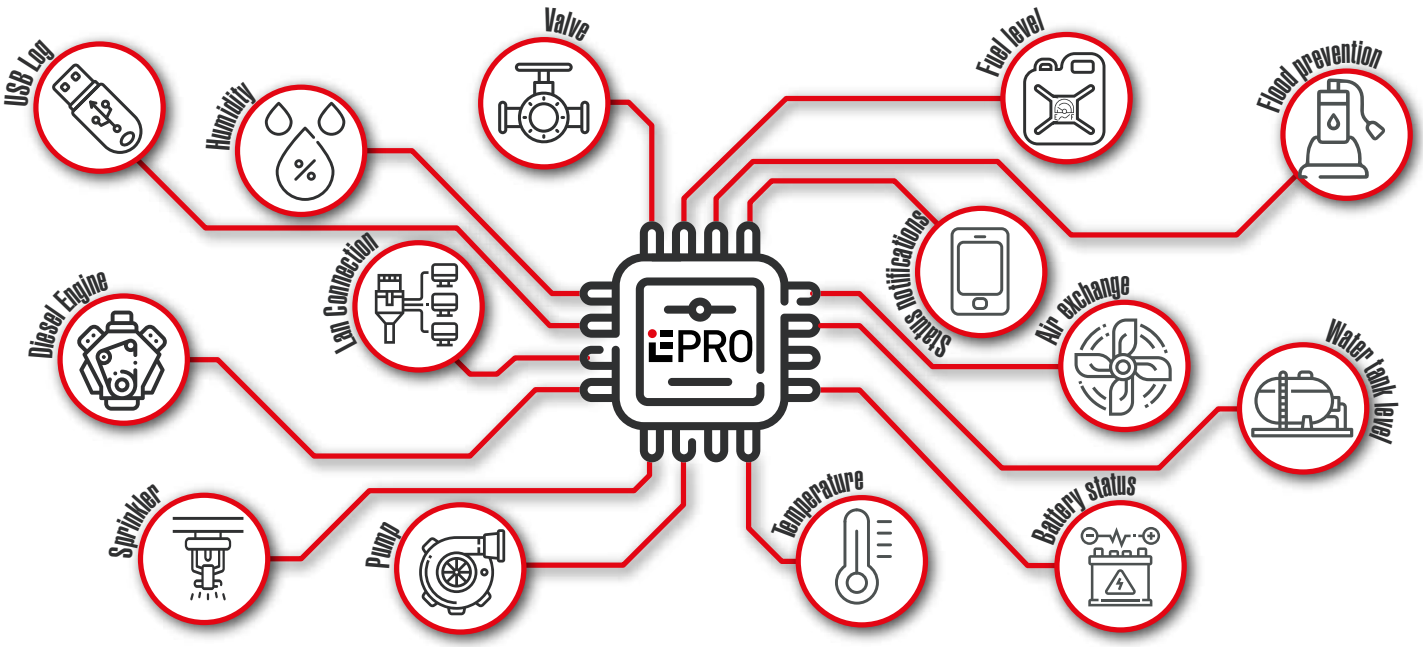

The technical data are not binding and can be modified without prior notice | The images are indicative and not binding

FIELDS OF APPLICATION

- SHOPPING CENTRES
- HOSPITALS
- INFRASTRUCTURES
- INDUSTRIES
- HOTEL COMPLEXES
- RESIDENTIAL
- CINEMAS AND THEATRES
- SCHOOLS

Main components:

- Power supply P+N+E 230V±10% 50/60Hz;
- 2 Battery chargers to charge and control 6A 12Vdc batteries for motors of up to 102kW, 10A 12Vdc for motors of up to 222kW, 10A 24Vdc for motors of over 222kW.
- LCD display to view battery charge voltage and current, total hour counter, motor rpm, event history, local temperature and water reserve level.
- Display with 6 languages: Italian, English, French, Estonian, Latvian, Romanian.
- Low voltage inputs and control circuits.
- Alarm output with potential-free contacts. Motor Inhibition Switch "0 – 1".
- 4-20 mA signal input from level transmitter.
- LEDs indicating operation, anomaly, weekly test button activation, power ON.
- Battery emergency start buttons.
- Power circuit protection fuses.
- Auxiliary circuit protection fuses.
- General disconnector with door lock.
- RS-485 serial connection for connection with QUEPRO100 remote panel.
- Operation is possible according to UNI10779.
- Ambient temperature: -5/+40 °C. Relative humidity 50% at 40°C (not condensed).
- Terminal block.
- User manual.
- Wiring diagram and EC declaration.
- Failed start-up.
- Faulty control unit

Code	Operating current	Description
	A	
QUENEMP0006	6	Lombardini / Vm
QUENEMP0010	10	Iveco
QUENEMP10-24	10 - 24V	Clarke

Fire-fighting units catalogue - Edition: September-2021

EPRO CONTROL

REMOTE SUPERVISION OF PUMPING UNITS WITH EPRO SERIES CONTROL UNITS

Main features:

The EPRO CONTROL electrical panel allows remote repetition of the alarms detected by the following type of panels: EPRO DIESEL, EPRO ELECTRIC, EPRO ENERGY. UNI EN 12845:2020 sets forth that the alarms detected in the fire-fighting system are transmitted to a permanently manned station, inside or outside the building.
The RS485 connection can be made with the above devices using a 2X0.75 FGOR shielded cable or similar, compatible with the place of installation up to a maximum length of 800 metres.

EPRO CONTROL allows you to control up to a maximum of 8 EPRO devices at the same time.

The EPRO family of devices also includes EPRO Electric (Electric pump management panel), EPRO Diesel (Motor pump management panel) and EPRO Energy (Emergency panel).

Advantages:

- 4.3" TFT LCD graphic display with simple and intuitive user friendly interface
- Slot for mounting the GSM message card. (Optional)
- Sending alarm messages
- High resistance to vibrations;

Construction specifications:

- Panel made of a thermoplastic material box
- IP55 protection rating (IP66 on request)
- Colour RAL3000

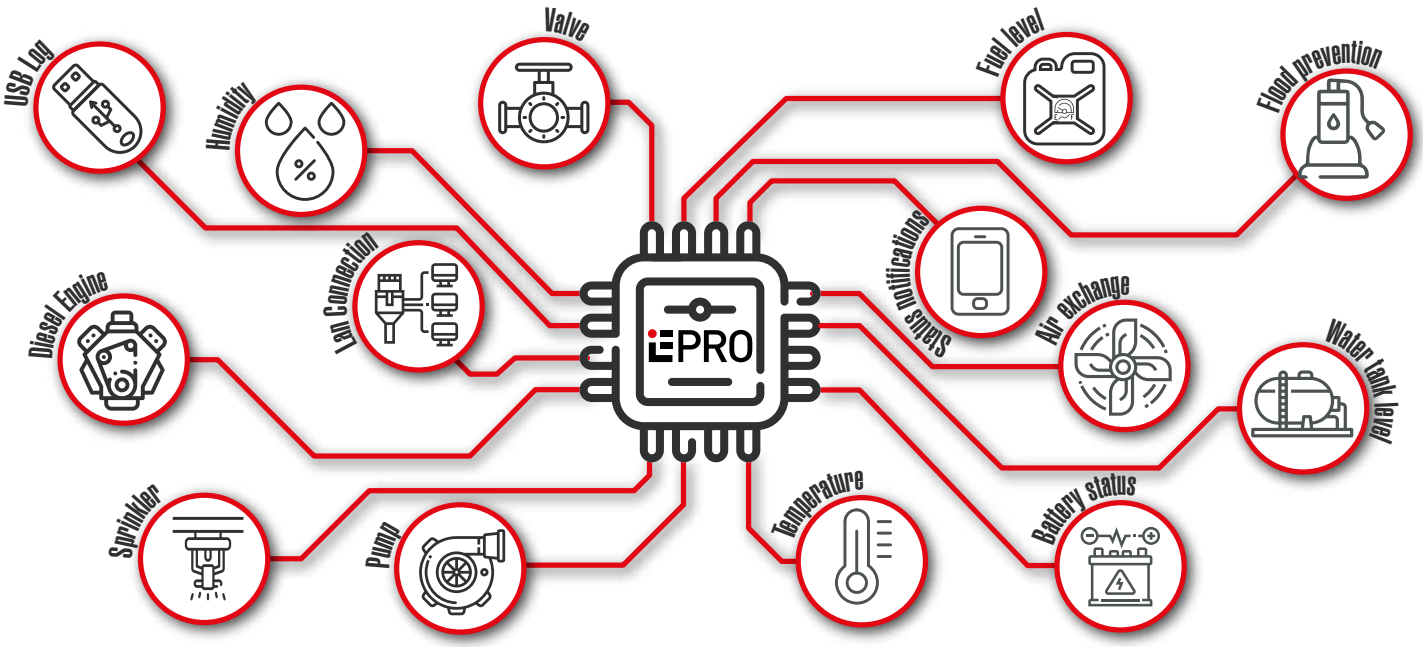

The technical data are not binding and can be modified without prior notice | The images are indicative and not binding

FIELDS OF APPLICATION

- SHOPPING CENTRES
- HOSPITALS
- INFRASTRUCTURES
- INDUSTRIES
- HOTEL COMPLEXES
- RESIDENTIAL
- CINEMAS AND THEATRES
- SCHOOLS

Main components:

- Power supply P+N+E 230V±10% 50/60Hz;
- Graphic LCD with system key, icons and texts relating to the system status;
- Message screen; Sending alarms via GSM module (optional);
- Type "A" alarm LEDs (operation), type "B" alarm (anomaly), Epro Control supply anomaly, power ON;
- Battery with built-in battery charger;
- 2 potential-free contacts in type "A" alarm exchange;
- 2 potential-free contacts in type "B" alarm exchange;
- Acoustic warning buzzer of alarms with 98dB intensity;
- Connection to main panels via 2x0.75 shielded cable.
- General disconnector with door lock; Enclosure in thermoplastic material;
- Terminal block;
- User manual;
- Wiring diagram and EC declaration.

Standard Version

Code	Description
QUEPRO100	EPRO Control alarms panel

Version with GSM

Code	Description
QUEPRO100 GSM	EPRO Control + GSM Kit alarms panel

*Sim Card not included

LIST OF ALARMS AVAILABLE

Alarm	Type of alarm	Point in UNI EN 12845
Tripped flow switch	A	10.3.2
Electric pump start-up request	B	10.8.6.1
Failed electric pump start-up	B	10.8.6.1
Electric pump in operation	A	10.8.6.1
Power not available to the electric pump panel	B	10.8.6.1
Automatic starting mode of the motor pump excluded	B	10.9.11
Failed motor pump start-up	B	10.9.11
Motor pump in operation	A	10.9.11
Fault in the motor pump control panel	B	10.9.11

Fire-fighting units catalogue - Edition: September-2021

EPRO ENERGY

MANAGEMENT AND CONTROL IN AN EMERGENCY OF ALL THE UTILITIES IN THE FIRE-FIGHTING ROOM (EMERGENCY PANEL)

Main features:

The EPRO Energy electrical panel manages all the utilities in UNI 11292 compliant rooms.
Through the battery pack, the emergency panel card allows you to power some utilities in a power failure, such as a fan, emergency light, auxiliary 230V output.
All the main data, related to the events log, are stored inside the control unit in chronological order and can be downloaded to a USB drive.
The EPRO family of devices also includes EPRO Electric (Electric pump management panel), EPRO Diesel (Motor pump management panel) and EPRO Control (Alarm repetition panels)

Advantages:

- 4.3" TFT LCD graphic display
- Internal “black box” memory to store 512 events
- Type “A” USB port for log download
- 10/100Mbps Ethernet port to communicate with Modbus TCP-IP protocol
- Pump set management Local management (fan, Jockey pump, valves,etc.)

Construction specifications:

- Metal box panel
- IP54 protection rating (IP55 or higher on request)
- Painted with epoxy polyester powders in RAL3000

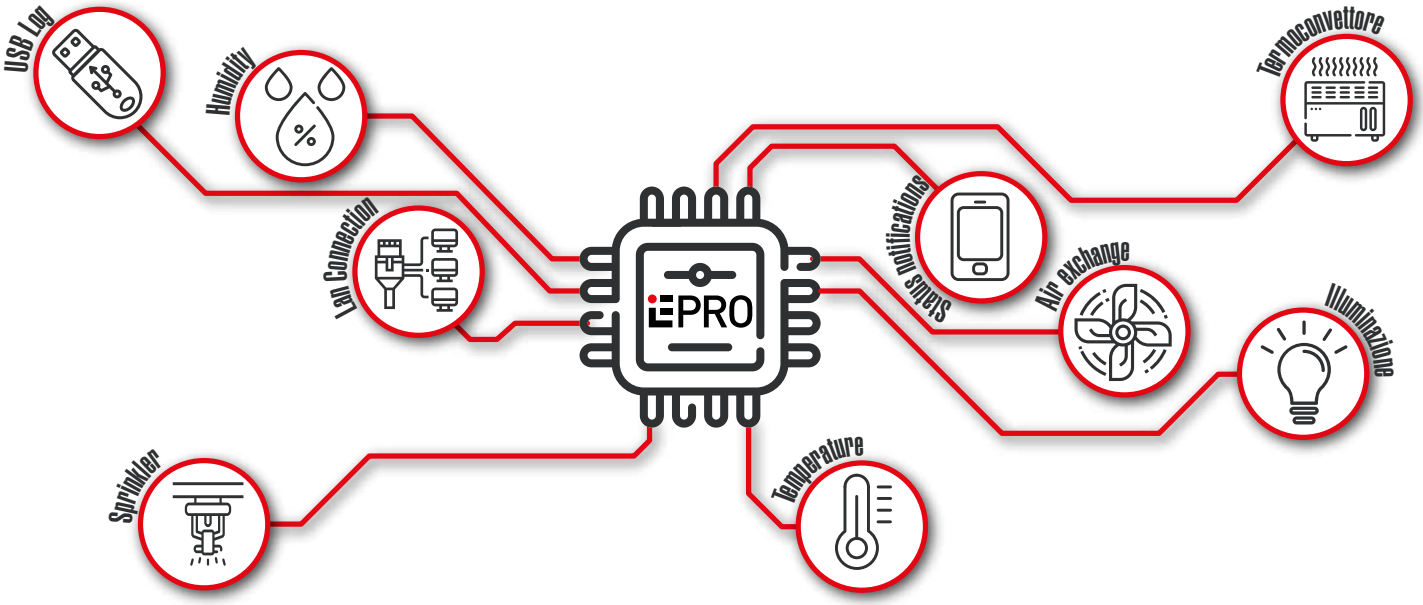

FIELDS OF APPLICATION

- SHOPPING CENTRES
- HOSPITALS
- INFRASTRUCTURES
- INDUSTRIES
- HOTEL COMPLEXES
- RESIDENTIAL
- CINEMAS AND THEATRES
- SCHOOLS

Main components:

- Power supply 3P+E 400V±10% 50/60Hz;
- LCD display to view total hour counter, motor current absorption, event log, room temperature and water reserve level.
- Display with 6 languages: Italian, English, French, Estonian, Latvian, Romanian.
- Low voltage inputs and control circuits.
- Alarm output with potential-free contacts.
- Motor Inhibition Switch "0 – 1".
- 4-20 mA signal input from level transmitter.
- Operation warning LEDs, anomaly, mains presence, mains absence, power ON.
- Class II transformer.
- AC3 sized contactors.
- Motor protection fuses.
- Auxiliary circuit protection fuses.
- General disconnector with door lock.
- RS-485 serial connection for connection with QUEPRO100 remote panel.
- Operation is possible according to UNI10779.
- Ambient temperature: -5/+40 °C.
- Relative humidity 50% at 40°C (not condensed).
- Terminal block.
- User manual.
- Wiring diagram and EC declaration

Code	Max initial starting current	Max output current	Mains Outputs				UPS Outputs			Input and Output Voltage	Total Voltage Accumulators	Dimensions (mm)		
			Pump	Heater	Jockey pump	Auxiliary service socket	Pump	Ceiling light	Extractor					
	A	A	230V	230 V	400 V	230 V	230 V	230V	230 V	± 15%	V	L	A	P
QUENESOC10V1	16	4.5	-	-	-	-	-	-	6A	1+N+T~230V	24	400	680	250
QUENESOC15V1	30	6.6	-	-	-	-	-	-	6A	1+N+T~230V	48	400	680	250
QUENESOC15V2	30	6.6	-	2kW	2.2 kW	10A	6A	36W	6A	3+N+T~400V	48	550	750	250
QUENESOC15V3	30	6.6	6A	2kW	2.2 kW	10A	6A	36W	6A	3+N+T~400V	48	550	750	250
QUENESOC10V2	16	4.5	-	2kW	2.2 kW	10A	-	36W	2.5A	3+N+T~400V	24	550	750	250
QUSOCO1500	30	6.6	6A	-	-	10A	6A	36W	6A	3+N+T~400V	48	550	750	250

ENERGY KIT WITH LEAD ACID BATTERIES

The kit includes lead-acid batteries and their holder and cover, if necessary

Code	For Emergency Panel	No. Supports	No. Batteries	Indicative autonomy Min
QUSOCV1000M060	QUSOCU1000	1	2x 55 A/h	60
QUSOCV1000M120	QUSOCU1000	2	2x 100 A/h	120
QUSOCV1500M060	QUSOCU1500	2	4x 55 A/h	60
QUSOCV1500M120	QUSOCU1500	2	4x 80 A/h	120

The technical data are not binding and can be modified without prior notice | The images are indicative and not binding

CONTROL PANEL FOR JOCKEY ELECTRIC PUMP

The Jockey electrical panel controls the Jockey electric pumps in the pumping units, compliant with UNI EN 12845:2020.
The Jockey electrical panel manages direct start-up electric pumps and is interfaced with EPRO series devices.
Assembled in a painted sheet metal case with IP54 protection rating, built according to the IEC standards in force and compliant with the requirements of UNI EN 12845:2020.

Main features:
- Electromechanical panel;
- High resistance to vibrations;
- Terminal block warning potential-free contacts.

Management and storage of the following alarms:
- Running for too long
- Excessive number of start-ups
- Thermal block

Via connection to the EPRO series control unit

General features:
- Power supply 3P+E 400V±10% 50/60Hz;
- Manual-off-automatic mode selector;
- Thermal block and operation LEDs;
- AC3 sized contactors;
- AC3 sized thermal relay;
- Class II transformer;
- Auxiliary protection fuses;
- 1 Potential-free contact in running exchange;
- 1 Potential-free contact in thermal block exchange;
- General disconnector with door lock;
- Enclosure in metal material;
- Terminal block;
- User manual;
- Wiring diagram and EC declaration.

Code	Power		Operating current
	kW	Hp	A
QUENPIL00000V75	0.55-0.75	0.75-1	1.6-2.5
QUENPIL00001V5	1.1-1.5	1.5-2	2.5-4
QUENPIL00002V2	1.1-2.2	1.5-3	4-6.5
QUENPIL00003	3	4	6.3-10
QUENPIL00004	4	5.5	9-14
QUENPIL00005V5	5.5	7.5	9-14
QUENPIL00007V5	7.5	10	13-18

UTILITY DISTRIBUTION PANELS FOR UNI 11292 COMPLIANT ROOMS

Mains powered outputs:

- Antifreeze pump (Max 6A 230V)
- Thermo convector space heater
- Neon ceiling light
- Auxiliary service socket (Max 10A 230V)
- Jockey electric pump

TECHNICAL AND CONSTRUCTION INFORMATION

- IP54 product protection rating.

Code		Motor pump 1	Motor pump 2	Emergency Panel	Jockey pump	Room ceiling light + Heater	Dimensions (mm)		
							L	A	P
QUDISTR00A	MULTI-UTILITY MODULAR PANEL				✓	✓	30	42	14
QUDISTR23	MULTI-UTILITY MODULAR PANEL	✓	✓	✓	✓	✓	30	42	14
QUDISTR32	MULTI-UTILITY MODULAR PANEL	✓		✓	✓	✓	30	42	14

GSM KIT FOR EPRO CONTROL

The Epro Control panel can be completed with the GSM module to send alert messages to the system manager/operator. The messages are sent via a mini-SIM CARD (not supplied).
The system may be requested when placing the order or even installed inside the EPRO CONTROL panel when the unit is used and once the systems are completed.

GSM Card

The kit consists of:

- Card with SIM holder tilting slide for easy interchangeability or first insertion can be housed inside the EPRO CONTROL panel (Picture 1).
- Removable mini antenna inserted directly on the card (Picture 1).
- 5-metre extension cord to move the antenna for better positioning for coverage purposes. (Picture 2).
- Connection cable between EPRO CONTROL and GSM module (Picture 3).

Antenna Extension

Connecting cable
EPRO Control

Technical features

- Operation with no mains supply.
- Ten settable telephone numbers.
- 5-metre extension cord included to move the antenna.
- Interface cable with EPRO CONTROL panel.
- Two outgoing messages (alarm type “A” and type “B”).
- Numbers setting from EPRO CONTROL panel display.
- Display showing no GSM module communication.
- GSM / GPRS 2G type of transmission.
- Data or voice + data type SIM (no voice only SIM).
- Data transmission standard that functions in the following areas: EMEA, North and South America, APAC, Australia.

The technical data are not binding and can be modified without prior notice | The images are indicative and not binding

FAQ

HOW CAN A TANK BE INSTALLED UNDERGROUND IN ABSENCE OF AN AQUIFER

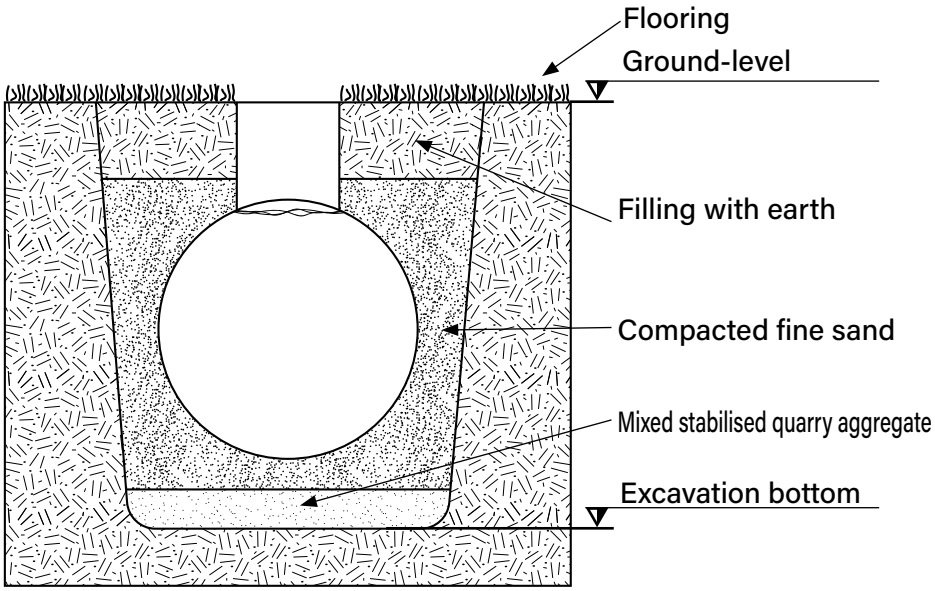

Indicative set up layout to install tanks underground in the absence of an aquifer.

For complete specifications of the various underground installation stages, refer to our technical office or to the document in our section called "The expert replies"

https://bit.ly/3hezRep

HOW CAN A TANK BE INSTALLED UNDERGROUND IN PRESENCE OF AN AQUIFER

Indicative set up layout to install tanks underground in the presence of an aquifer.

For complete specifications of the various underground installation stages, refer to our technical office or to the document in our section called "The expert replies"

https://bit.ly/2UFp31g

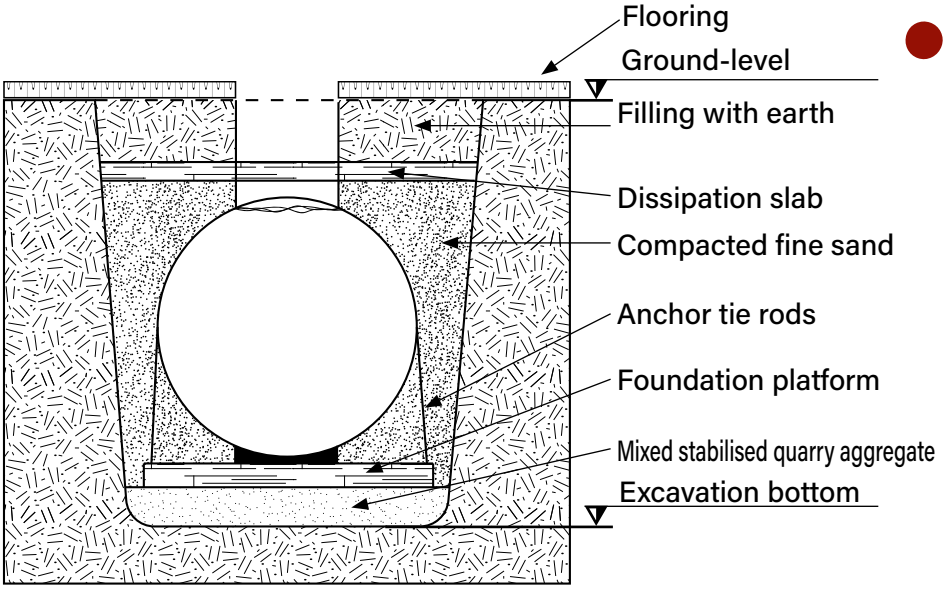

MORE INFORMATION
WWW.IDRO-ELETTRICA.IT

WATER RESERVES

EXTERNAL WATER RESERVES IN STEEL SHEET METAL

INTENDED FOR FIRE-FIGHTING WATER RESERVE

Main features:

Idroelettrica SpA builds monobloc water reserves for outdoor use to be used as fire-fighting water reserves, made of steel UNI EN10025-2, complete with: Lifting eyebolts; Welds performed according to procedures and by qualified personnel who are certified in accordance with UNI EN 287/I; Welding wire type IT-SG3 (high resistance welds, up to 600 N/mm^2) tested at a pressure of 1.5 Bar; Internal and external coating consisting of a treatment with two-component grey anti-corrosive epoxy (for non-food use).

FIELDS OF APPLICATION

- SHOPPING CENTRES
- HOSPITALS
- INFRASTRUCTURES
- INDUSTRIES
- HOTEL COMPLEXES
- RESIDENTIAL
- CINEMAS AND THEATRES
- SCHOOLS

Advantages:

Possibility of continuously controlling the level of the water reserve UNI EN 12845 H.2.4 Set up for an Anti-vortex plate, which allows the value of the minimum head above the intake to be limited UNI EN 12845/9.3.5. Therefore, the volume of the water storage reserve is almost fully exploited.

Construction specifications:

Every water reserve is statically and dynamically designed and tested, with the limit state method, according to the laws and technical standards in force, using the Enexsys calculation code. The indispensable internal reinforcement elements to guarantee the stability of the water reserve have been sized based on the calculation; these reinforcements are implemented with high-strength metal profiles (UPN 80, T60X60).

The technical data are not binding and can be modified without prior notice | The images are indicative and not binding

Main components:

- Walkable cover in galvanised sheet metal
- Adjustable feet
- Overflow sleeve
- Vent pipe of adequate diameter
- Set up for electrical and hydraulic connections.
- Standard RAL7035 colour with two-component anti-corrosive epoxy.
- Anti-freeze protection with armoured and thermostatically controlled resistance to be connected by the customer

Lid and vent detail

Adjustable foot detail

Code	Geometric capacity	Useful capacity	Diameter	Length	Thickness	Weight
	m³	m³	mm	mm	mm	Kg
001490T	6	5	2000	2000	5	760
001490U	9	8	2000	3000	5	1000
001490V	13	12	2000	4500	5	1370
001490VC	17	15	2000	5500	5	1610
001491A	11	10	2500	2500	5	1100
001491B	19	15	2500	4000	5	1560
001491BC	24	20	2500	5000	5	1860
001491C	26	23	2500	5500	5	2020
001491D	29	25	2500	6000	5	2170
001491E	33	30	2500	7000	5	2480
001491F	41	36	2500	8500	5	2940
001491FC	46	40	2500	9500	5	3250
001491G	51	45	2500	10500	5	3550
001491H	53	48	2500	11100	5	3710
001491HBC	60	54	2500	12500	5	4170
001491HBF	65	59	2500	13500	5	4480

Code	Geometric capacity	Useful capacity	Diameter	Length	Thickness	Weight
	m³	m³	mm	mm	mm	Kg
001491HDF	55	50	3000	8100	6	4150
001491HF	62	55	3000	8700	6	4600
001491I	66	60	3000	9600	6	4820
001491L	73	65	3000	10600	6	5260
001491LC	77	70	3000	11100	6	5490
001491M	80	72	3000	11600	6	5710
001491N	84	75	3000	12100	6	5930
001491P	87	80	3000	12600	6	6150
001491Q	101	90	3000	14600	6	7040
001491R	105	95	3000	15100	6	7270
001491R2	112	100	3000	16100	6	7710
001491S	110	100	3500	11700	7	7170
001491T	120	110	3500	12700	7	7690
001491U	134	120	3500	14200	7	8470
001491V	144	130	3500	15200	7	8990
001491W	158	140	3500	16700	7	9770

Fire-fighting units catalogue - Edition: September-2021

UNDERGROUND WATER RESERVES IN STEEL SHEET METAL

INTENDED FOR FIRE-FIGHTING WATER RESERVE

Main features:

Idroelettrica SpA builds monobloc water reserves for underground installation, used as fire-fighting water reserves, implemented according to procedures and by qualified personnel who are certified in accordance with UNI EN 287/I; Welding wire type IT-SG3 (high resistance welds, up to 600 N/mm²) tested at a pressure of 1.5 Bar; External coating consisting of tar paint treatment; internal coating with two-component anti-corrosive epoxy (for non-food use).

FIELDS OF APPLICATION

- SHOPPING CENTRES
- HOSPITALS
- INFRASTRUCTURES
- INDUSTRIES
- HOTEL COMPLEXES
- RESIDENTIAL
- CINEMAS AND THEATRES
- SCHOOLS

Advantages:

The water reserves are normally supplied in a WALKABLE version. On request, it is possible to make them suitable for light or heavy traffic. Upon the customer's request, they can be set up for installations that envisage the presence of an aquifer.

Construction specifications:

Every water reserve is statically and dynamically designed and tested, with the limit state method, according to the laws and technical standards in force, using the Enexsys calculation code. The indispensable internal reinforcement elements to guarantee the stability of the water reserve have been sized based on the calculation; these reinforcements are implemented with high-strength metal profiles (UPN 80, T60X60).

All water reserves are equipped with automatic top-up equipment (e.g. solenoid valves, mechanical valves, etc.) and which are fed from any source (aqueduct, artesian/phreatic well, etc.) must include an "overflow" drain pipe that allows the automatic top-up equipment correct operation to be visually verified.

Fire-fighting units catalogue - Edition: September-2021

The technical data are not binding and can be modified without prior notice | The images are indicative and not binding

Immediate access to the "overflow" operation of the water reserve, makes it possible to visually check the malfunctions of the top-up equipment and prevent wasting water and economic resources.

Main components:

- Walkable cover in galvanised steel
- Fall-arrest grid in galvanised steel
- Inspection pit 700x700mm x H = 500mm.
- Overflow sleeve diam. 4"
- 2" water valve

Fall-arrest grid detail

Internal reinforcements detail

Code	Geometric capacity	Useful capacity	Diameter	Length	Thickness	Weight
	m³	m³	mm	mm	mm	Kg
001491XK	6	5	2000	2000	5	810
001491XX	9	8	2000	3000	5	1050
001491YC	13	12	2000	4500	5	1420
001491Z	17	15	2000	5500	5	1660
001492	11	10	2500	2500	5	1150
001492A	19	15	2500	4000	5	1610
001492B	24	20	2500	5000	5	1910
001492BF	26	23	2500	5500	5	2070
001492C	29	25	2500	6000	5	2220
001492D	33	30	2500	7000	5	2530
001492E	41	36	2500	8500	5	2990
001492F	46	40	2500	9500	5	3300
001492G	51	45	2500	10500	5	3600
001492H	53	48	2500	11100	5	3760
001492I	60	54	2500	12500	5	4220
001492IC	65	59	2500	13500	5	4530
001492J	55	50	3000	8100	6	4200

Code	Geometric capacity	Useful capacity	Diameter	Length	Thickness	Weight
	m³	m³	mm	mm	mm	Kg
001492JF	62	55	3000	8700	6	4650
001492K	66	60	3000	9600	6	4870
001492L	73	65	3000	10600	6	5310
001492LF	77	70	3000	11100	6	5540
001492M	80	72	3000	11600	6	5760
001492MF	84	75	3000	12100	6	5980
001492N	87	80	3000	12600	6	6200
001492NM	91	85	3000	13600	6	6680
001492P	101	90	3000	14600	6	7090
001492PF	105	95	3000	15100	6	7320
001492Q	112	100	3000	16100	6	7760
001492R	110	100	3500	11700	7	7220
001492S	120	110	3500	12700	7	7740
001492T	134	120	3500	14200	7	8520
001492U	144	130	3500	15200	7	9040
001492V	158	140	3500	16700	7	9820

The technical data are not binding and can be modified without prior notice | The images are indicative and not binding

UNDERGROUND WATER RESERVES IN VIBRATED REINFORCED CONCRETE

Main features:

Monobloc prefabricated water reserve in vibrated reinforced concrete for underground use, complete with pedestrian cover, implemented with a continuous casting of concrete prepared with PORTLAND CEMENT, compliant with UNI EN 197-1 (i.e. POZZOLANIC for specific exposure classes at the Customer's request), with compressive strength C35/45 (Rck = 450 Kg/cm^2), exposure classes XC4 (concrete resistant to carbonation corrosion), XS2/XD2 (concrete resistant to chloride corrosion), XF1 (concrete resistant to freezing/defrosting), XA1 (mildly aggressive chemical environments), in compliance with UNI EN 206-1, fibre-reinforced with synthetic fibres, of STRUX 90/40 type, with water reducing additives and incorporated air reducing additives; all to create a monolithic, compact casting, free of cracks and impermeable to water, with external and internal surfaces with an exposed finish, eliminating porosity and gravel nests.

Please refer to the specific technical data sheets and the mix-design used for the properties of the materials used.

The reinforcement consists of electro-welded meshes and improved adhesion stiffening bars, made of factory-checked B450C steel, all in compliance with Italian M.D. 14.01.2008. The reinforcement cage is implemented on a template, according to the project tables.

Capacity	Length	Width	Height	Water reserve weight	Cover Weight (q)	
					Vehicular slab	Walkable slab
m³	m	m	m	q	th=20cm	th=20cm
12.5	2.5	2.5	2.5	72	30	15
25.7	2.5	5	2.5	119	58	29
38.9	2.5	7.5	2.5	166	86	43
52.1	2.3	2.5	2.5	213	114	57

The technical data are not binding and can be modified without prior notice | The images are indicative and not binding

CYLINDRICAL EXTERNAL WATER RESERVES

Main features:

The cylindrical water reserves consist of steel sheet metal panels secured with bolted joints and an internal tear-proof reinforced PVC membrane. Various solutions can be studied from time to time based on the customer's indications.

In cases where there is limited space available, for example when the diameter of the structure or the height of the tank must be contained, it is always possible to set up twin tanks interconnected by a hydraulic by-pass pipe. This is a more expensive version, which however, allows technical problems to be solved, which would otherwise be difficult, if not impossible, to be resolved.

For particular aesthetic or environmental needs, it is possible to apply an additional external paint coating, while maintaining the anti-corrosive characteristics of the surface treatments of the sheet metal and the components of the structure unaltered. RAL colours can be chosen for the additional paint coating.

Capacity	Diameter	Height
m³	m	m
121	4.59	7.83
131	4.59	8.46
138	5.35	6.63
215	5.35	10.23
128	6.11	4.83
180	6.11	6.63
233	6.11	8.46
246	6.11	9.03
255	7.64	6.06

Capacity	Diameter	Height
m³	m	m
310	7.64	7.26
365	7.64	8.46
276	8.41	5.43
308	8.41	6.06
441	8.41	8.46
464	8.41	9.03
525	9.17	8.46
698	9.94	9.66
827	9.94	11.43

Additional capacities and diameters are available on request

The technical data are not binding and can be modified without prior notice | The images are indicative and not binding

FAQ

WHICH OPERATIONS ARE TO BE COMPLETED BEFORE COMMISSIONING THE SYSTEM ?

In the days prior to the set commissioning date, the following operations must be completed on the fire-fighting system:

- Fill the water reserve up to the intended maximum level
- Set up and power all the intended electrical connections
- Set up and feed all the intended hydraulic connections
- Fill the diesel engine tank (if the motor pump is present)
- The keys to the utility room must be available
- Personnel with electrical and hydraulic skills must be present
- Connecting the alarms to the remote alarm control units

WHAT IS A TYPICAL CONNECTION LAYOUT OF THE ELECTRICAL PANELS IN A FIREBOX ?

Inside the Firebox, there are several electrical control and protection panels for pumps and services, in compliance with the requirements of UNI EN 12845 and UNI 11292. A typical connection diagram is shown at the side if there are 1 main electric pump and 1 main motor pump.

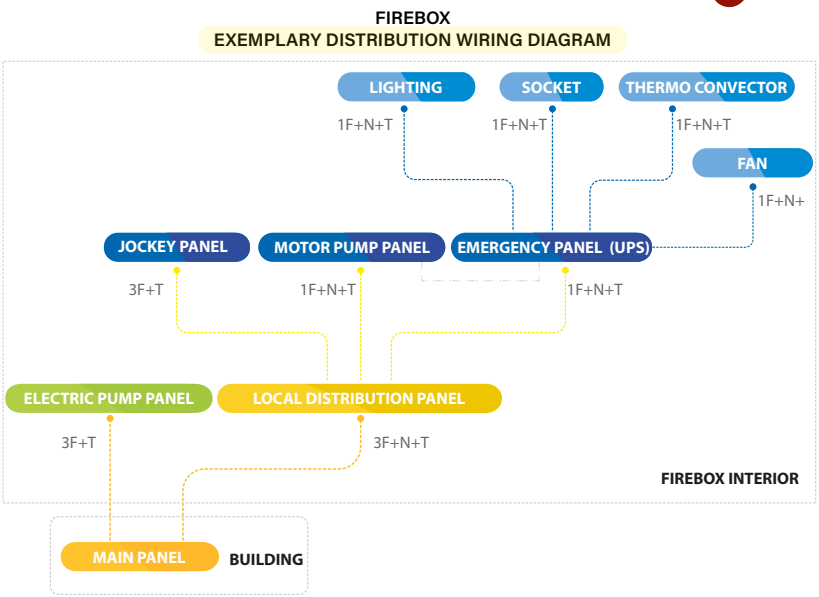

MORE INFORMATION
WWW.IDRO-ELETTRICA.IT

INTEGRATED FIRE-FIGHTING SYSTEMS

UNI EN 12845 - UNI EN 10779 - UNI 11292

FIREBOX®

modular firefighting•system

FIREBLOCK

modular firefighting•system complete of water storage

EXAMPLES OF INSTALLATION

PREFABRICATED FIRE-FIGHTING MODULE UNI EN 12845 - UNI 11292 - UNI EN 1090

FIREBOX®
modular firefighting•system

Complete and autonomous fire protection system. Constitutes the room of the fire-fighting water unit. It can contain centrifugal pumps, vertical submersible pumps (VTP) and the control equipment for submersible pumps.

Structure designed and built according to UNI EN 1090

FIREBOX® is designed and built according to **UNI EN 1090** Part 1 and Part 2 (Execution of steel structures and aluminium structures – requirements for conformity assessment of structural components).

It is essential to comply with this standard to build and certify metal structures made in the workshop correctly. Only by complying with **UNI EN 1090** can the metal structures be **CE** certified.

Fully assembled accessories

Inside **FIREBOX®** there are all the accessories indicated in **UNI 11292** and they are connected, such as: fire extinguishers, general and emergency lighting, 2" sprinkler system, flue pipe, air extraction fan, heating system, openings for permanent ventilation, service electrical system and double-walled diesel tank.

Full accessibility and safety of the operators

FIREBOX® consists of side buffers in sandwich panels EI 60 A2 s1 d0, which create movable sides that can be fully opened. It is therefore possible to access the components housed in it from all sides, both during operation and maintenance, as set forth in **UNI 11292 4.2.1 - 4.2.2**

Testing

The components fitted in each **FIREBOX®** have been tested in the test room, in accordance with the requirements set forth in **UNI EN 12845**. In particular, the diesel engine is tested in accordance with **UNI EN 12845/10.9.13.**

Mandatory certifications

EC Declaration of conformity of the pressurisation unit drawn up in accordance with Annex II a of **DIR. 2006/42/EC**.

Structural report of the room according to **UNI EN 1090**, drawn up by a qualified professional, complete with an anti-seismic report, linked to the individual installation site.

FIRE-RESISTANCE RATING CERTIFICATION and **PROD. DEC.** of the room, drawn up by a qualified professional, who certifies the fire resistance (R60) of the load-bearing structure.

Declaration according to **Italian M.D. 37/08** of the hydraulic and electrical system of the room.

The technical data are not binding and can be modified without prior notice | The images are indicative and not binding

INTERNAL WORKSPACES

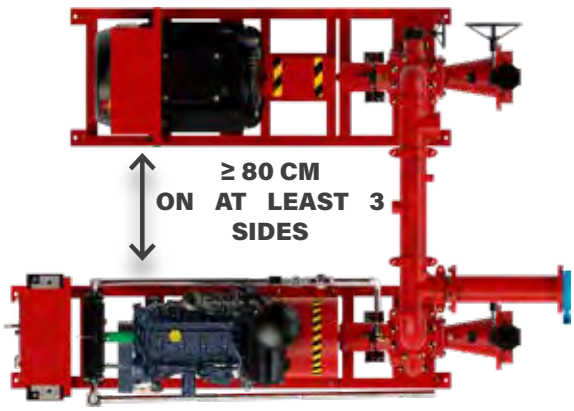

ROOM MINIMUM INTERNAL HEIGHT

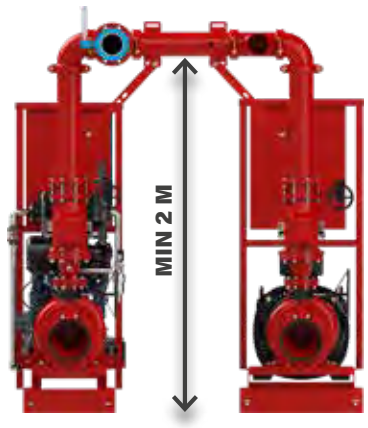

Workspace

Inside **FIREBOX**® the WORKSPACE (**UNI 11292 3.13**) around every pumping unit (PUMP SET **UNI 11292 3.15**) has minimal plan dimensions that are equal to or greater than 80 cm on at least three sides **UNI 11292 5.2.2.**

Room height

A height of not less than 2.4 m is guaranteed in the workspace and along the path to reach it; the delivery manifold and all the pipes are placed at a minimum height of 2 m **UNI 11292 5.2.2**

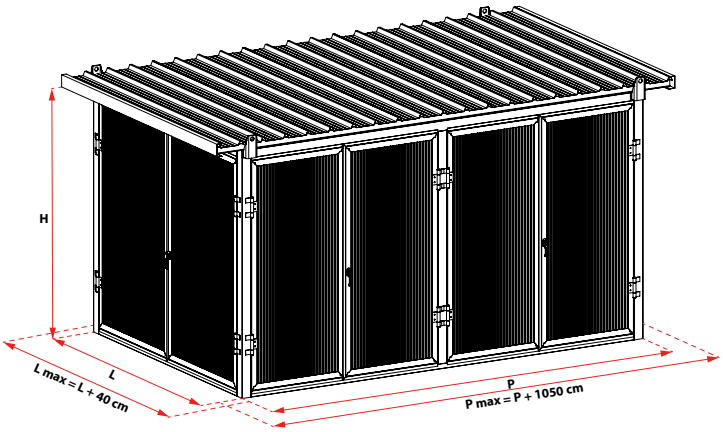

Fire resistance R60

A bearing structure in steel profiles, sized to obtain a **fire resistance of 60 minutes (R60) UNI EN 12845:2020 10.3.1.**

FIREBOX MODULES DIMENSIONS AND WEIGHTS

TYPE OF MODULE		L mm	P mm	H mm	N° of DOORS	Weight Kg
2X1		1271	2271	2510	4	920
2X2		2271	2400	2500	8	1230
3X2		2271	3410	2500	10	1650
3X3		2850	3410	2500	10	1890
4X2		2271	4442	2500	12	2010
4X3		2850	4442	2500	12	2180
5X2		2271	5580	2500	14	2335
5X3		2850	5580	2500	14	2740
6X2		2271	6680	2500	16	2748
6X3		2850	6680	2500	16	3463

Reaction to fire

The side buffer of **FIREBOX**® consists of sandwich panels that make it thermally insulated, thanks to the 80 mm rock wool (EI60); therefore, they are set up on all sides of the opening walls with $A_2s_1d_0$ fire reaction efficiency, as set forth in **UNI 11292 5.1.**

Fire-fighting units catalogue - Edition: September-2021

FIREBOX

UNI EN 12845 - UNI 11292 fire protection system with Horizontal Centrifugal electric pumps

MAIN COMPONENTS

NEGATIVE SUCTION HEAD VERSION

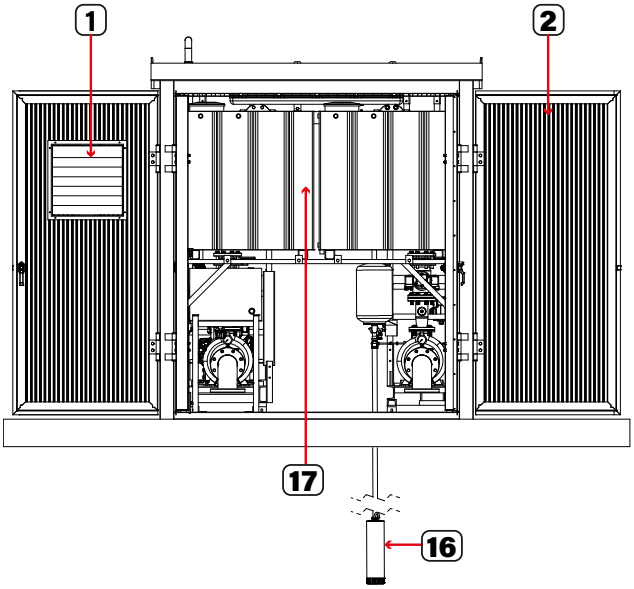

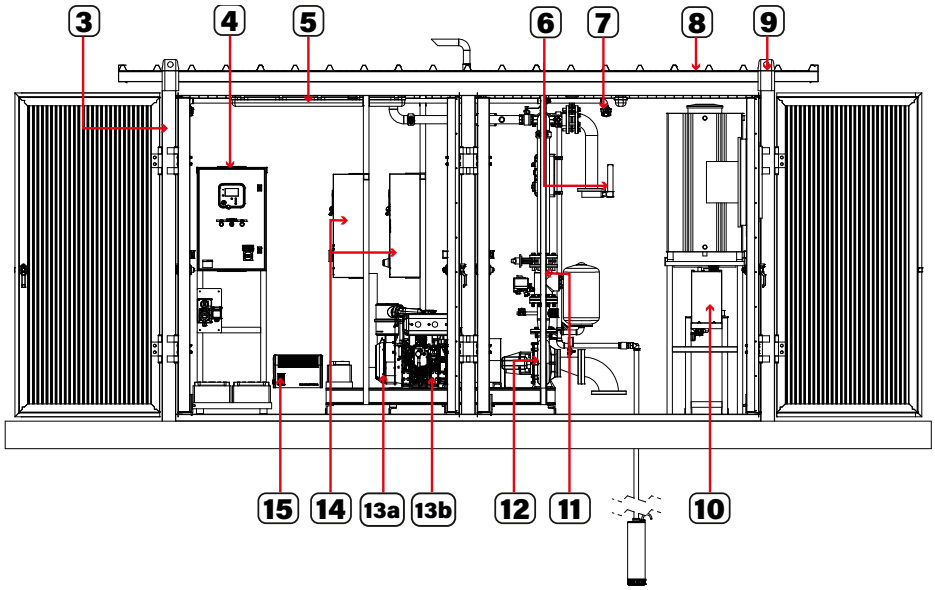

1	Fan
2	Side Panels EI60 A2s1d0
3	Structure R60
4	Emergency Panel
5	Room lighting
6	Flowmeter kit complete with upstream pipe section L> 5 diam.
7	2" Sprinkler Kit complete with Flow switch as required by UNI EN 12259-5
8	Cover with sandwich panels for structural uses EI60 $A_2s_1d_0$.
9	Handling brackets

10	Diesel tank (Autonomy 6 h)
11	Pressure switches and diaphragms circuit
12	Main pump
13a	Main pump electric motor
13b	Main pump diesel engine
14	Electrical Panels
15	Thermo convector
16	Jockey pump with H>80% H main pump UNI EN 12845 10.7.5.2
17	Priming tank

FIREBOX

UNI EN 12845 - UNI 11292 fire protection system with Horizontal Centrifugal electric pumps

MAIN COMPONENTS

POSITIVE SUCTION HEAD VERSION

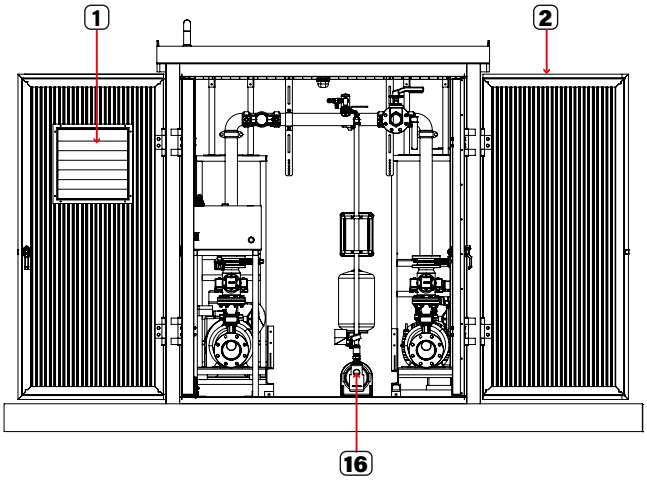

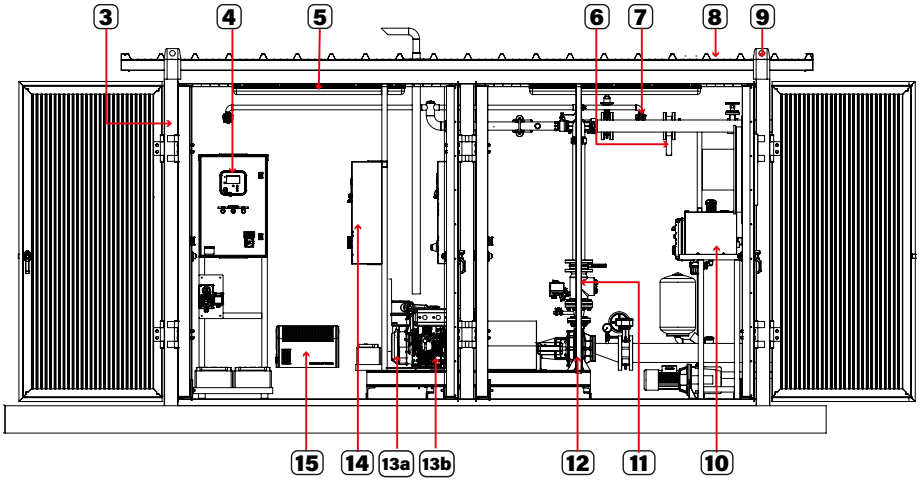

1	Fan
2	Side Panels EI60 A2s1d0
3	Structure R60
4	Emergency Panel
5	Room lighting
6	Flowmeter kit complete with upstream pipe section L> 5 diam.
7	2" Sprinkler Kit complete with Flow switch as required by UNI EN 12259-5
8	Cover with sandwich panels for structural uses EI60 $A_2s_1d_0$.

9	Handling brackets
10	Diesel tank (Autonomy 6 h)
11	Pressure switches and diaphragms circuit
12	Main pump
13a	Main pump electric motor
13b	Main pump diesel engine
14	Electrical Panels
15	Thermo convector
16	Jockey pump with H>80% H main pump UNI EN 12845 10.7.5.2

Fire-fighting units catalogue - Edition: September-2021

HANDLING & TRANSPORT

FIREBOX®
modular firefighting•system

FIREBOX® requires very limited on site interventions. It is sufficient to place it on or next to the water storage reserve, secure the individual PUMP SETs to the slab using the preset locking points and connect it hydraulically and electrically. The system is now ready to deliver the intended project services (Q/H).

The box must be handled and unloaded by qualified and expert personnel, using only suitable and approved equipment. The box must be lifted and handled with a crane suitable for the weight indicated on the drawing sent with the order, while ensuring to maintain an angle of all the wire ropes that support it to less than 40°, using all the preset eyebolts simultaneously; using less than four eyebolts is not allowed.

WHAT INFO DO WE NEED FROM THE CUSTOMER FOR TRANSPORT

Minimum customer conditions required for transport and delivery

- Accessibility for trucks/low-floor articulated lorry of at least 16.5 metres
- Practical spaces to facilitate vehicle entry and manoeuvring
- Asphalted and/or paved unloading area and transit routes
- Presence of necessary documentation for site access (E.g. Limited traffic zones, occupied public land, etc.)
- Systems and means of adequate capacity to unload the goods

WHAT WE OFFER THE CUSTOMER

Delivery logistics of goods

Organisation of customised, dedicated, ordinary and exceptional transport, with and without escort, in Italy and abroad.

It is possible to provide custom services, including unloading and positioning, through special semi-trailers owned by the company, in full compliance with the regulations that govern the transport of special loads.

Fire-fighting units catalogue - Edition: September-2021

The technical data are not binding and can be modified without prior notice | The images are indicative and not binding

UNLOADING WARNINGS

- Only use adjustable pendants with at least four arms of adequate length and adequate capacity, checking that the chains are not damaged and the hooks are fitted with safety locks.
- Anchor the hooks in the specific lifting eyebolts in the top perimeter of the structure, taking care to balance the weights.
- Pay particular attention when handling and lifting the Firebox as it has no floor, in accordance with the standard (UNI 11292 6.6).
- Do not stand in the handling area.

Easy transport

Depending on the size, the fully assembled **FIREBOX**® can be transported on a trailer with ordinary or exceptional transport, eliminating the need for technical escort, unless mandatory, and it can be handled with simple cranes.

Due to its design as a mobile compartment, **FIREBOX**® is moved very easily, if the protected activity is relocated.

The technical data are not binding and can be modified without prior notice | The images are indicative and not binding

PREFABRICATED FIRE-FIGHTING MODULE WITH VTP PUMPS
UNI EN 12845 - UNI 11292 - UNI EN 1090

FIREBOX VTP
modular firefighting•system

VERTICAL TURBINE PUMPS

Using vertical submersible axial flow pumps (UNI EN 12845/10.6.1) leads to the enormous advantage of having an always positive suction head, even with an underground storage water reserve. The vertical pumps can be connected to both electric and diesel engines and guarantee very high operational reliability.

ALWAYS POSITIVE SUCTION HEAD

Choosing to use **FIREBOX®** with vertical pumps and an underground water reserve implements a POSITIVE SUCTION HEAD hydraulic system, as preferred by UNI EN 12845/10.6.1. In this case, there is no limitation to the usable depth within the water reserve.

OPENABLE ROOF

Where units with VERTICAL TURBINE PUMPS are housed, **FIREBOX®** devices are made with an openable roof to facilitate any maintenance. The machines are assembled in the facility and can be positioned in the water reserve with a simple crane.

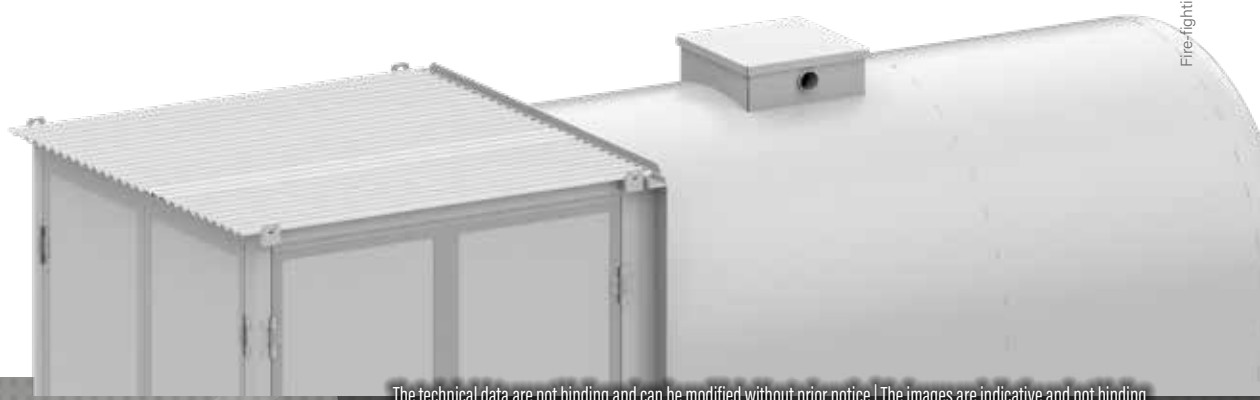

FIREBOX VTP

UNI EN 12845 - UNI 11292 fire protection system with VTP electric pumps

MAIN COMPONENTS

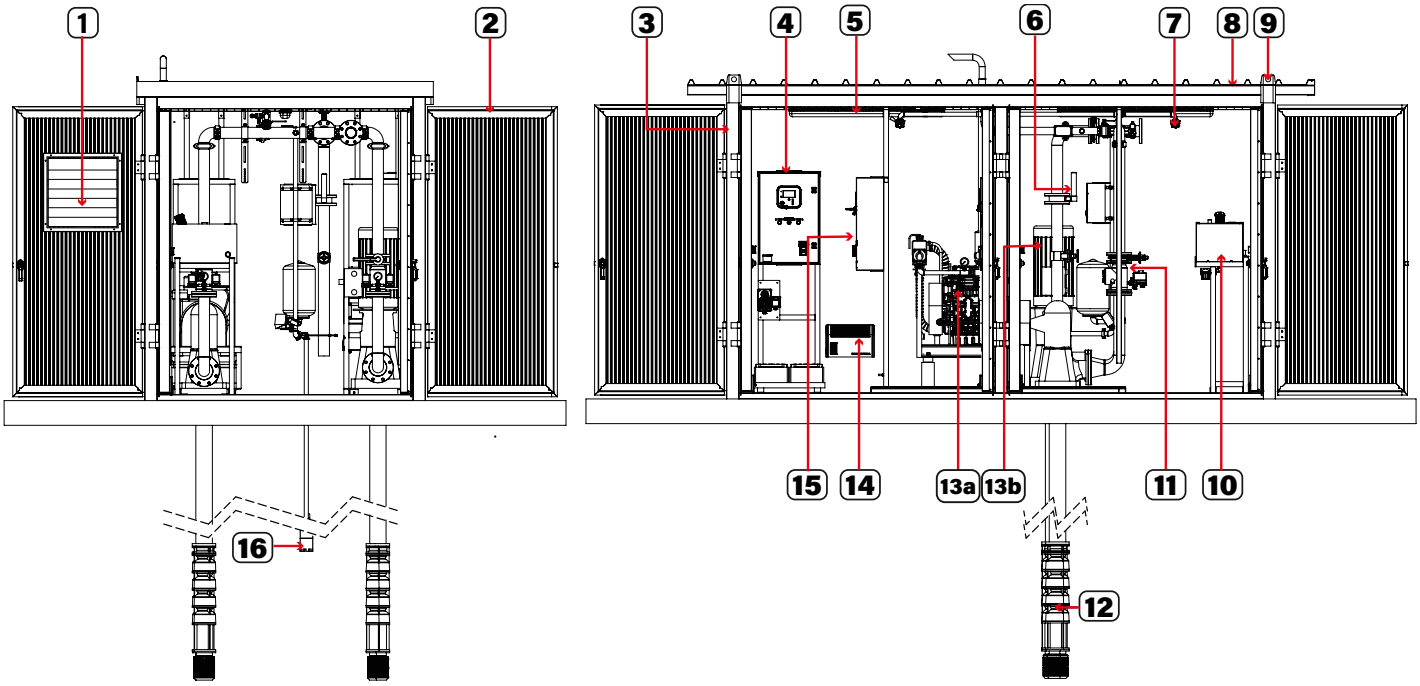

1	Fan
2	Side Panels EI60 $A_2s_1d_0$
3	Structure R60
4	Emergency Panel
5	Room lighting
6	Flowmeter kit complete with upstream and downstream pipe sections L> 5 diam.
7	2" Sprinkler Kit complete with Flow switch in accordance with UNI EN 12259-5
8	Cover with sandwich panels for structural uses EI60 $A_2s_1d_0$.

9	Handling brackets
10	Diesel tank (Autonomy 6 h)
11	Pressure switches and diaphragms circuit
12	Vertical shaft semi-axial main pump (VTP).
13a	Main pump diesel engine
13b	Main pump electric motor
14	Thermo convector
15	Electrical Panels
16	Jockey pump with H>80% H main pump UNI EN 12845 10.7.5.2

Fire-fighting units catalogue - Edition: September-2021

PREFABRICATED FIRE-FIGHTING MODULE WITH INTEGRATED WATER RESERVE UNI EN 12845 - UNI 11292 - UNI EN 1090

FIREBLOCK
modular firefighting system complete of water storage

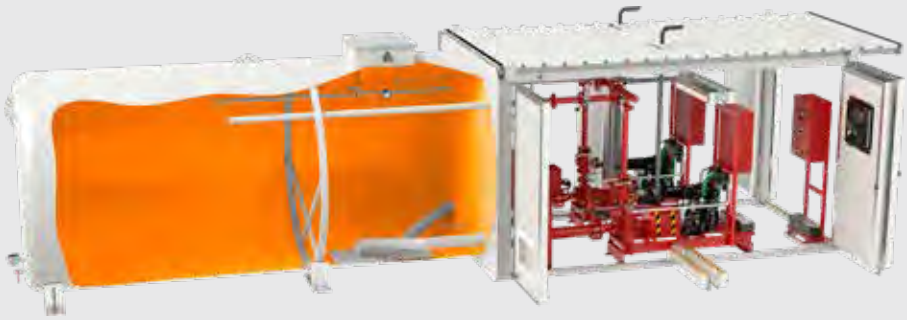

The FIREBLOCK system is a fire-fighting system in the outdoor version, consisting of two main elements, the FIREBOX module containing a fire-fighting pressurisation unit UNI EN 12845 and an outdoor water reserve in a horizontal or vertical application.

Main features

- Side buffers in sandwich panels EI 60 A2 s1 d0, which create movable sides that can be fully opened
- Full accessibility for people and for components to be handled
- Perfectly compliant with technical standards and legal provisions
- Designed to be installed in seismic areas
- No ladders and risks for the safety of people
- Bearing structure of the R60 room
- Easy to disassemble and transport
- UNI 1090 certified and produced entirely in the IDROELETTRICA SPA facilities
- EC certification according to Machinery Directive 2006/42/EC
- The water reserve is calculated to provide the required useful capacity

FIREBOX MODULES DIMENSIONS AND WEIGHTS FOR FIREBLOCK

TYPE OF MODULE		L	P	H	N° of DOORS	Weight
		mm	mm	mm		kg
2X2		2271	2400	2500	8	1230
3X2		2271	3410	2500	10	1650
4X2		2271	4442	2500	12	2010

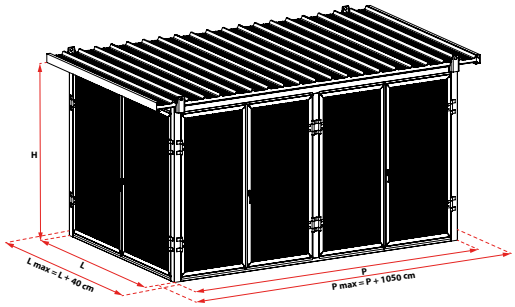

HORIZONTAL WATER RESERVES FOR FIREBLOCK

Useful capacity	Diameter	Length	Thickness	Supports	Resistors	Weight
m³	mm	mm	mm	N°	N°	kg
7	2500	1900	5	5	1	1000
10		2400	5	1	1	1450
15		3900	5	1	1	2000
20		4900	5	1	1	2300
23		5400	5	1	1	2300
25		5900	5	2	1	2520
30		6900	5	3	1	2930
36		8400	5	3	1	2900
40		9400	5	3	1	3600
45		10400	5	4	2	3900
50		11400	5	4	2	4500
55		12400	5	4	2	4950
60		13900	5	5	2	5070
65		14900	5	5	2	5610
70		15900	5	5	2	5840
72		16400	5	5	2	6010

Useful capacity	Diameter	Length	Thickness	Supports	Resistors	Weight
m³	mm	mm	mm	N°	N°	Kg
36	3000	5940	6	3	1	3300
40		6300	6	2	1	3600
50		7900	6	3	1	4500
55		8900	6	3	1	4950
58		9400	6	3	1	5200
61		9900	6	3	1	5070
70		10900	6	4	2	5840
72		11400	6	4	2	6010
77		12400	6	4	2	6300
80		12900	6	4	2	6500
85		13400	6	4	2	6800
87		13900	6	4	2	6900
95		14900	6	5	2	7620
100		15900	6	5	2	7620
104		16400	6	5	2	7890
106		16900	6	5	2	7990
112		17900	6	7	2	1770

VERTICAL WATER RESERVES FOR FIREBLOCK

Useful capacity	Diameter	Length	Thickness	Resistors	Weight
m³	mm	mm	mm	N°	kg
10	2500	3280	5	1	1450
15	2500	4300	5	1	2000
20	2500	5600	5	1	2300
25	2500	6600	5	1	2520
30	2500	7600	5	1	2900
36	3000	6600	6	1	3000
45	3000	8100	6	1	3900
52	3000	8800	6	1	4600
56	3000	9200	6	1	5000
59	3000	9700	6	1	5300
65	3000	10700	6	2	5700
72	3000	11400	6	2	6100

The technical data are not binding and can be modified without prior notice | The images are indicative and not binding

HORIZONTAL FIREBLOCK

UNI EN 12845 - UNI 11292 fire protection system with Horizontal Centrifugal electric pumps and integrated water reserve

MAIN COMPONENTS

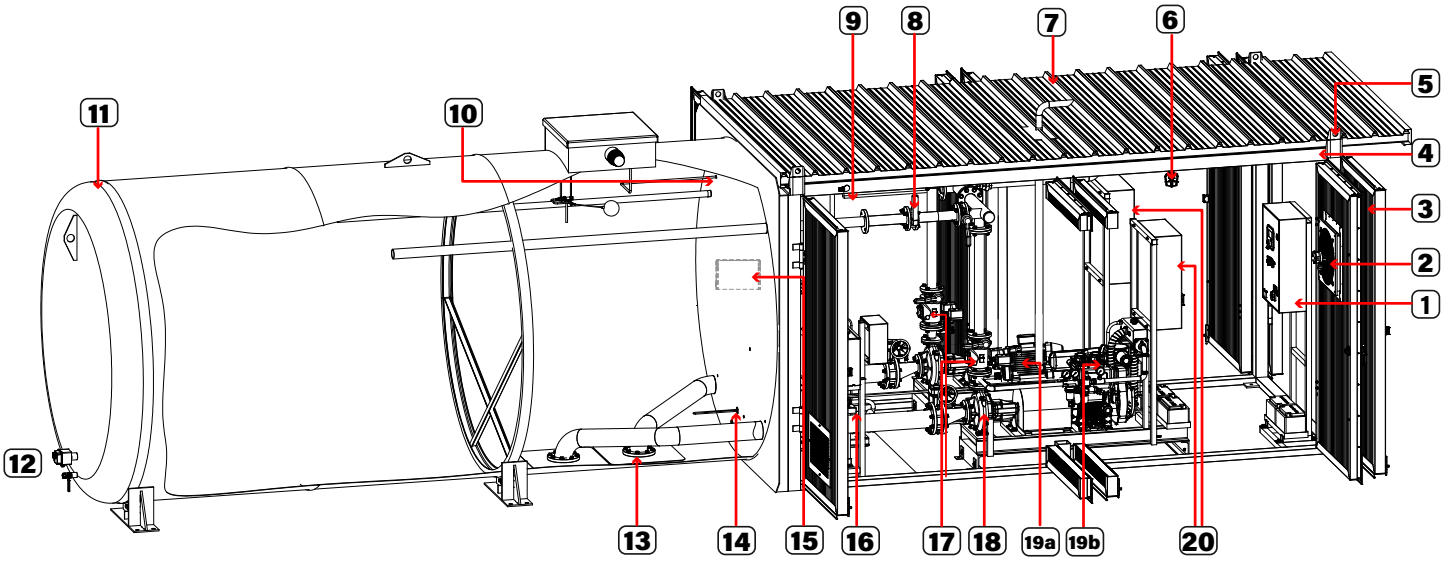

1	Emergency Panel.
2	Forced ventilation UNI 11292.
3	Side Panels EI60 $A_2s_1d_0$.
4	Structure R60.
5	Handling brackets.
6	2" Sprinkler Kit complete with Flow switch in accordance with UNI EN 12259-5.
7	Cover with sandwich panels for structural uses EI60 $A_2s_1d_0$.
8	Flowmeter kit complete with upstream and downstream pipe sections L> 5 diam.
9	Room lighting.
10	Filling water valve.

11	Integrated water reserve made of Fe360B-S235JR UNI EN 10025-2, complete with lifting eyebolts.
12	Thermostatically controlled electrical resistance.
13	Anti-vortex plate.
14	Continuous control of the water reserve level.
15	Thermo convector.
16	Jockey pump with H>80% H main pump UNI EN 12845 10.7.5.2.
17	Pressure switch and diaphragm circuit.
18	Main pump.
19a	Main pump electric motor.
19b	Main pump diesel engine.
20	Electrical Panels.

VERTICAL FIREBLOCK

UNI EN 12845 - UNI 11292 fire protection system with Horizontal Centrifugal electric pumps and integrated water reserve

MAIN COMPONENTS

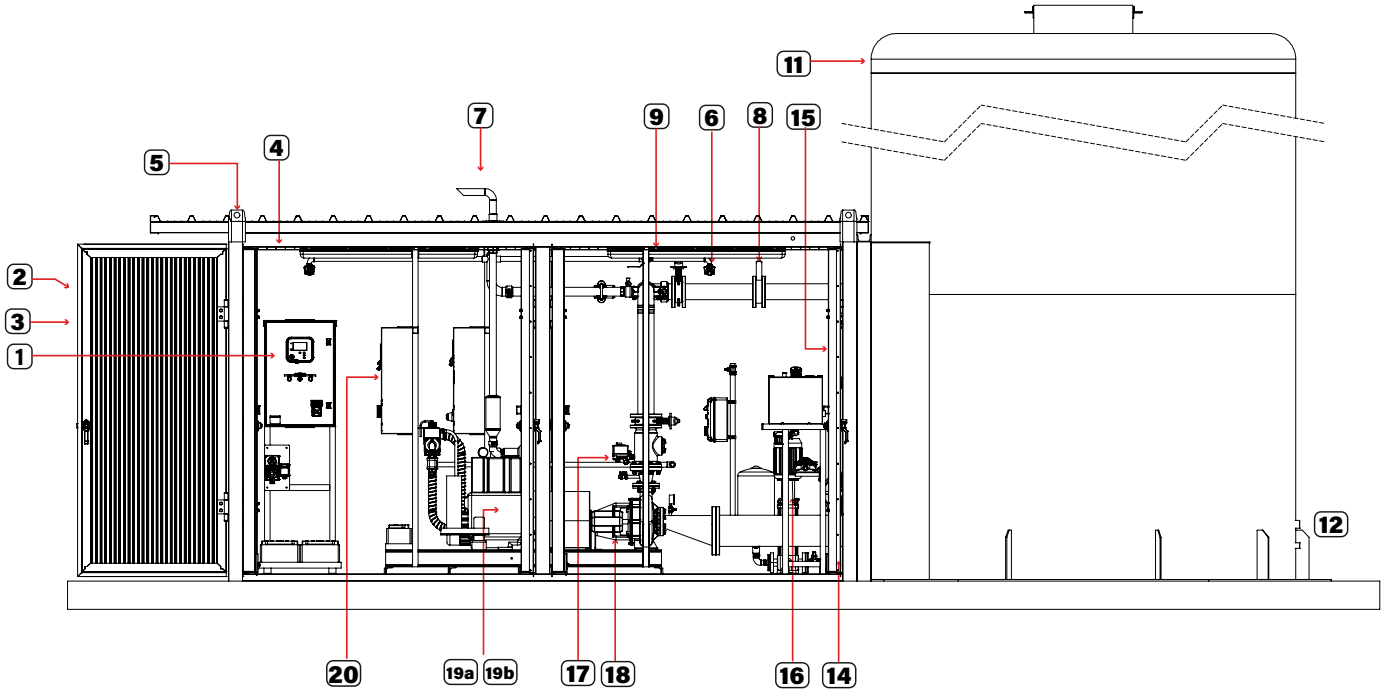

1	Emergency Panel.
2	Forced ventilation UNI 11292.
3	Side Panels EI60 $A_2s_1d_0$.
4	Structure R60.
5	Handling brackets.
6	2″ Sprinkler Kit complete with Flow switch in accordance with UNI EN 12259-5.
7	Cover with sandwich panels for structural uses EI60 $A_2s_1d_0$.
8	Flowmeter kit complete with upstream and downstream pipe sections L> 5 diam.
9	Room lighting.

11	Integrated water reserve made of Fe360B-S235JR UNI EN 10025-2, complete with lifting eyebolts.
12	Thermostatically controlled electrical resistance.
14	Continuous control of the water reserve level.
15	Thermo convector.
16	Jockey pump with H>80% H main pump UNI EN 12845 10.7.5.2.
17	Pressure switch and diaphragm circuit.
18	Main pump.
19a	Main pump electric motor.
19b	Main pump diesel engine.
20	Electrical Panels.

The technical data are not binding and can be modified without prior notice | The images are indicative and not binding

HANDLING & TRANSPORT

FIREBLOCK
modular firefighting system complete of water storage

FIREBLOCK reaches the site ready to deliver the intended project services (Q/H).
It is sufficient to place it and secure it to the floor, together with the individual PUMP SETs therein using the preset clamping points and connect it hydraulically and electrically.

FIREBLOCK must be handled and unloaded by qualified and expert personnel, using only suitable and approved equipment. **FIREBLOCK** must be lifted and handled with a suitable crane for the weight indicated on the drawing sent with the order confirmation, while ensuring to maintain an angle of all the wire ropes that support it to less than 40°, using all the preset eyebolts simultaneously; in any case, using less than four eyebolts is not allowed.

WHAT INFO DO WE NEED FROM THE CUSTOMER FOR TRANSPORT

Minimum customer conditions required for transport and delivery

- Accessibility for trucks/low-floor articulated lorry of at least 16.5 metres
- Practical spaces to facilitate vehicle entry and manoeuvring
- Asphalted and/or paved unloading area and transit routes
- Presence of necessary documentation for site access (E.g. Limited traffic zones, occupied public land, etc.)
- Systems and means of adequate capacity to unload the goods

WHAT WE OFFER THE CUSTOMER

Delivery logistics of goods

Organisation of customised, dedicated, ordinary and exceptional transport, with and without escort, in Italy and abroad.

It is possible to provide custom services, including unloading and positioning, through special semi-trailers owned by the company, in full compliance with the regulations that govern the transport of special loads.

The technical data are not binding and can be modified without prior notice | The images are indicative and not binding

UNLOADING WARNINGS

- Only use adjustable pendants with at least four arms of adequate length and adequate capacity, checking that the chains are not damaged and the hooks are fitted with safety locks.
- Anchor the hooks in the specific lifting eyebolts in the top perimeter of the structure, taking care to balance the weights.
- Operators must comply with all safety regulations relating to the handling of loads and works at a height
- Do not stand in the handling area.

Useful capacity m³	Number and position Eyebolts
10	1 – At the bottom
15	1 – At the bottom
20	2 – Sides
25	2 – Sides
30	2+2 – Lateral centre distance 1000
36	2+2 – Lateral centre distance 2600
50	2+2 – Lateral centre distance 3400
65	2+2 – Lateral centre distance 3400
72	2+2 – Lateral centre distance 3400

Easy transport

Depending on the size, the fully assembled FIREBOX can be transported on a trailer with ordinary or exceptional transport, eliminating the need for technical escort, unless mandatory, and it can be handled with simple cranes.

Due to its design as a mobile compartment, **FIREBOX** is moved very easily, if the protected activity is relocated.

The technical data are not binding and can be modified without prior notice | The images are indicative and not binding

PREFABRICATED FIRE-FIGHTING MODULE IN VIBRATED REINFORCED CONCRETE UNI EN 12845 - UNI 11292

FIREBOXCAV
modular firefighting•system

Complete and autonomous fire protection system. Constitutes the room of the fire-fighting water unit. It can contain centrifugal pumps, vertical submersible pumps (VTP) and the control equipment for submersible pumps.

FIREBOXcav is designed and built in vibrated reinforced concrete in a monobloc solution with a sloping roof, it does not require foundations and can be easily relocated.
Made with CE certified materials, concrete in compression resistance class C45/55 with IDROCONCRETE 1200: crystallising additive for integral system waterproof concrete, internal steel reinforcements with improved adhesion, steel fibres and electro-welded square mesh type B450C, accompanied by a REACTION TO FIRE certificate (class: A1) issued by an external body according to UNI EN standards, complete with:

- Fire protection pumping units UNI EN 12845
- Internal white paint.
- Sealing of the roofing plate to the cabin.
- External coating with grey anti-cracking elastomeric paint.
- Slated sheath over the roof.
- FIRE-RESISTANCE RATING 60 Doors.
- Anodised aluminium ventilation grid.

Fully assembled accessories

Inside **FIREBOX**cav there are all the accessories indicated in **UNI 11292** and they are connected, such as: fire extinguishers, general and emergency lighting, 2" sprinkler system, flue pipe, air extraction fan, heating system, openings for permanent ventilation, service electrical system and double-walled diesel tank.

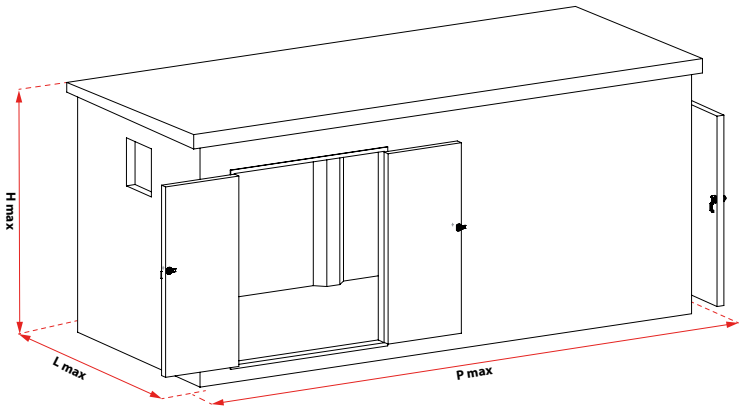

FIREBOX MODULES DIMENSIONS AND WEIGHTS

TYPE OF MODULE		Maximum cabin dimensions			Weight
		L	P	H	
		mm	mm	mm	kg
Cav22		3400	2550	2650	1295
Cav23		3900	2550	2650	1442
Cav24		4400	2550	2650	1598
Cav25		4900	2550	2650	1803
Cav26		5400	2550	2650	1955
Cav27		5900	2550	2650	2106
Cav28		6400	2550	2650	2258

The technical data are not binding and can be modified without prior notice | The images are indicative and not binding

FIREBOX CAV

UNI EN 12845 - UNI 11292 fire protection system with Horizontal Centrifugal electric pumps

MAIN COMPONENTS

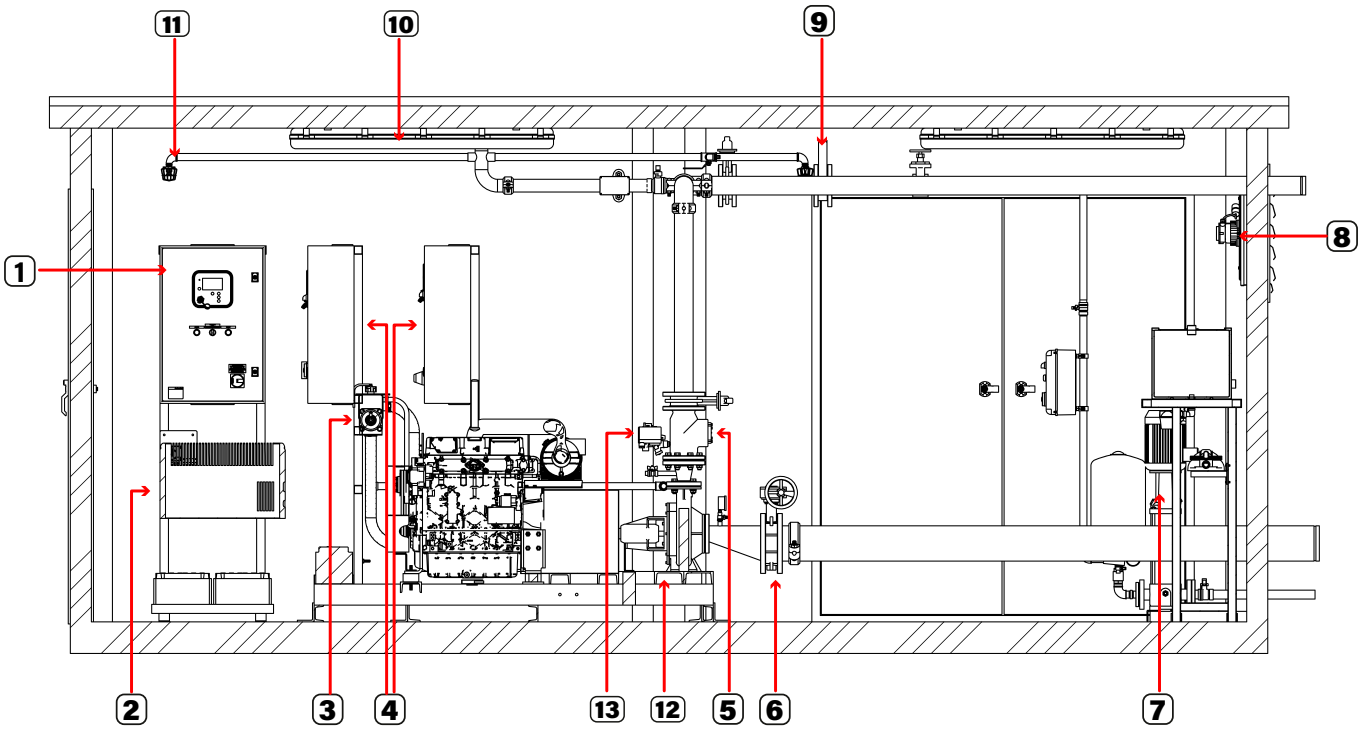

1	Emergency Panel.
2	Thermo convector.
3	Endothermic engine heat exchanger
4	Electrical Panels.
5	Handling brackets.
6	Eccentric intake cone
7	Jockey pump with H>80% H main pump UNI EN 12845 10.7.5.2.

8	Forced ventilation UNI 11292.
9	Flowmeter kit complete with upstream and downstream pipe sections L> 5 diam.
10	Room lighting.
11	2″ Sprinkler Kit complete with Flow switch in accordance with UNI EN 12259-5.
12	Main pump.
13	Pressure switch and diaphragm circuit.

Fire-fighting units catalogue - Edition: September-2021

PREFABRICATED FIRE-FIGHTING MODULE WITH SUBMERSIBLE ELECTRIC PUMPS UNI EN 12845 - UNI 11292 - UNI EN 1090

FIREBOX SOM
modular firefighting•system

FIREBOX SOM is a complete and autonomous fire-fighting room serving systems that use submersible pumps as main pumps.

FIREBOX SOM complies with all the points in UNI EN 12845, UNI 11292, UNI 10779 and IEC 64-8 and the provisions of Italian M.D. 81/2008 (Consolidated text on occupational health and safety).

Main features

- Side buffers in sandwich panels EI 60 A2 s1 d0, which create movable sides that can be fully opened
- Full accessibility for people and for components to be handled
- Perfectly compliant with technical standards and legal provisions
- Designed to be installed in seismic areas
- No ladders and risks for the safety of people
- Bearing structure R60
- Easy to disassemble and transport
- UNI 1090 certified and produced entirely in the IDROELETTRICA SPA facilities
- EC certification according to Machinery Directive 2006/42/EC
- It can be used with existing water reserves, both external and underground

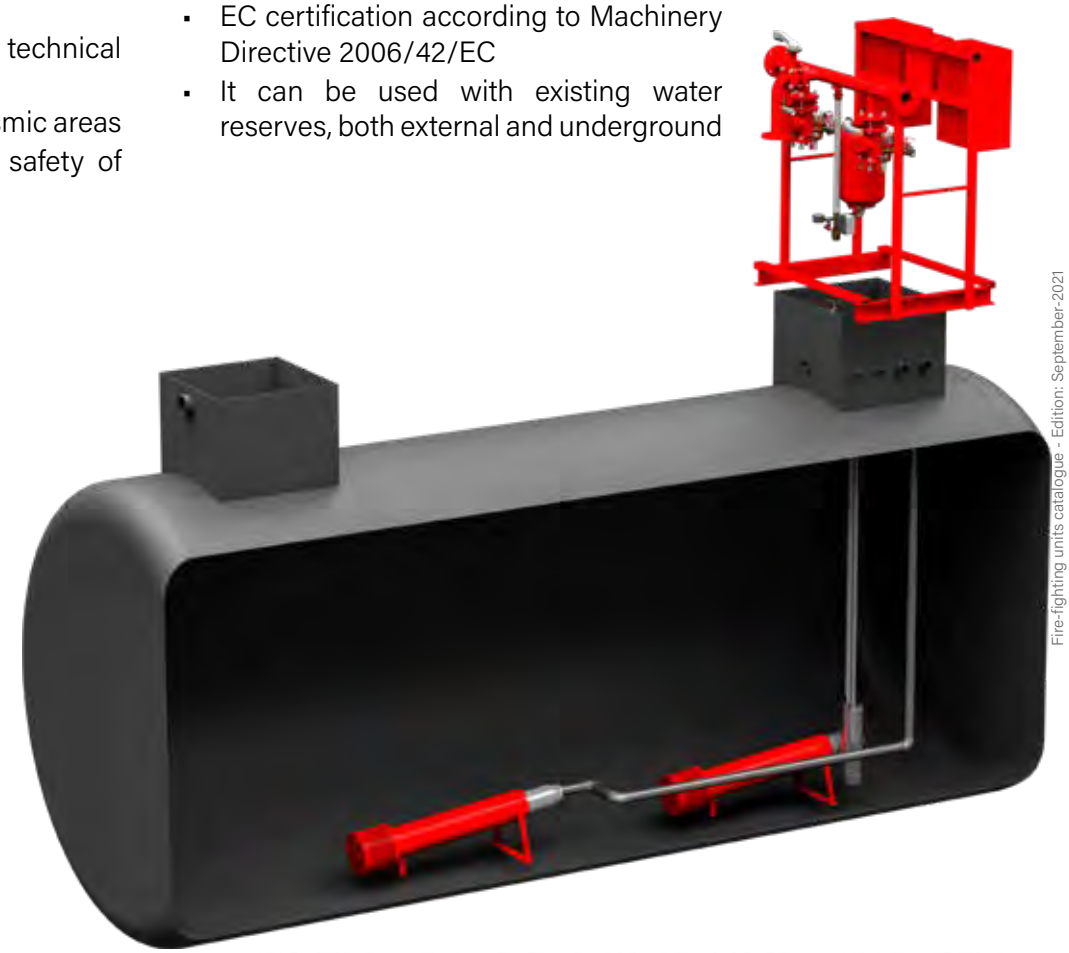

FIREBOX SOM

UNI EN 12845 - UNI 11292 fire protection system with submersible electric pumps

MAIN COMPONENTS

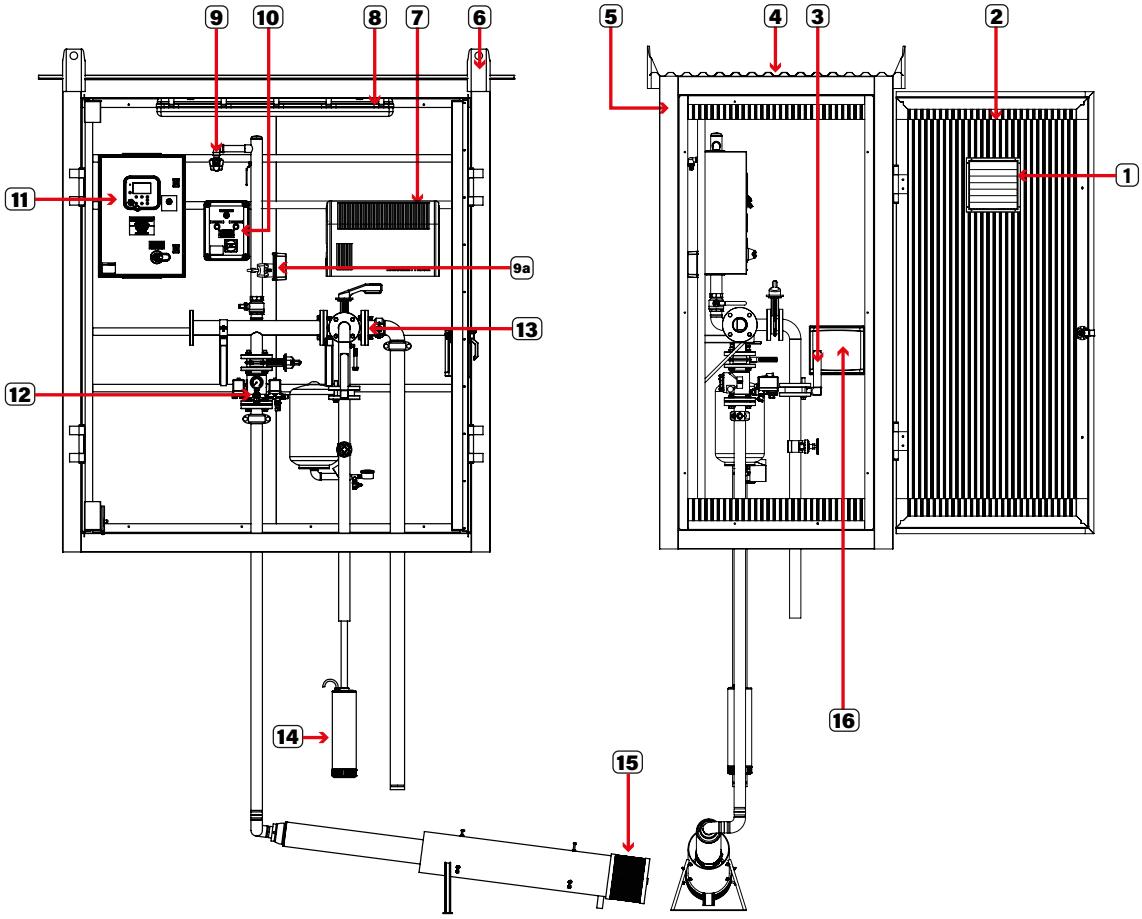

1	Air inlet grid
2	Side Panels EI60 A2s1d0
3	Flowmeter kit complete with upstream pipe section L> 5 diam.
4	Cover with sandwich panels for structural uses EI60 $A_2s_1d_0$.
5	Structure R60
6	Handling brackets
7	Thermo convector
8	Room lighting

9	2" Sprinkler Kit complete with Flow switch (9a) in accordance with UNI EN 12259-5
10	Jockey pump panel
11	Electrical Panels
12	Pressure switches and diaphragms circuit
13	Delivery to the system
14	Jockey pump with H>80% H main pump UNI EN 12845 10.7.5.2
15	Submersible main pump complete with cooling chamber
16	Room electrical panel

Fire-fighting units catalogue - Edition: September-2021

PREFABRICATED FIRE-FIGHTING MODULE WITH INTEGRATED WATER RESERVE UNI EN 12845 - UNI 11292 - UNI EN 1090

FIREBRAKE
modular firefighting•water storage integrated

The **FIREBRAKE** system is a water supply system for fire-fighting systems in the external version and consists of two main elements:

- A **FIREBOX** Module containing a fire-fighting pressurisation unit **UNI EN 12845**
- A water reserve implemented with parallelepiped galvanised tanks for fire-fighting use, placed in parallel and inside the **FIREBOX**. The maximum geometric volume achievable is 6 m^3.

The water reserve is complete with a 2" filling water valve and a minimum and maximum level alarm float
The two components are fully integrated and all develop inside the **FIREBOX**, thereby avoiding any problems related to frost.

FIREBRAKE is designed and built according to **UNI EN 1090** Part 1 and Part 2 (Execution of steel structures and aluminium structures – requirements for conformity assessment of structural components). It is essential to comply with this standard to build and certify metal structures made in the workshop correctly.
Every **FIREBRAKE** module is calculated and designed by a qualified engineer and complies with all the points in UNI **EN 12845, UNI 11292**, UNI 10779 and IEC 64-8 and the provisions of Italian M.D. 81/2008 (Consolidated text on occupational health and safety).

Main features

- Side buffers in sandwich panels EI 60 A2 s1 d0, which create movable sides that can be fully opened
- Full accessibility for people and for components to be handled
- Perfectly compliant with technical standards and legal provisions
- Designed to be installed in seismic areas
- No ladders and risks for the safety of people
- Bearing structure of the R60 room
- Easy to disassemble and transport
- UNI EN 1090 certified and produced entirely in the IDROELETTRICA SPA facilities
- EC certification according to Machinery Directive 2006/42/EC
- The water reserve is calculated to provide the required useful capacity

Fire-fighting units catalogue - Edition: September-2021

The technical data are not binding and can be modified without prior notice | The images are indicative and not binding

FIREBRAKE

UNI EN 12845 - UNI 11292 fire protection system with integrated water reserve

MAIN COMPONENTS

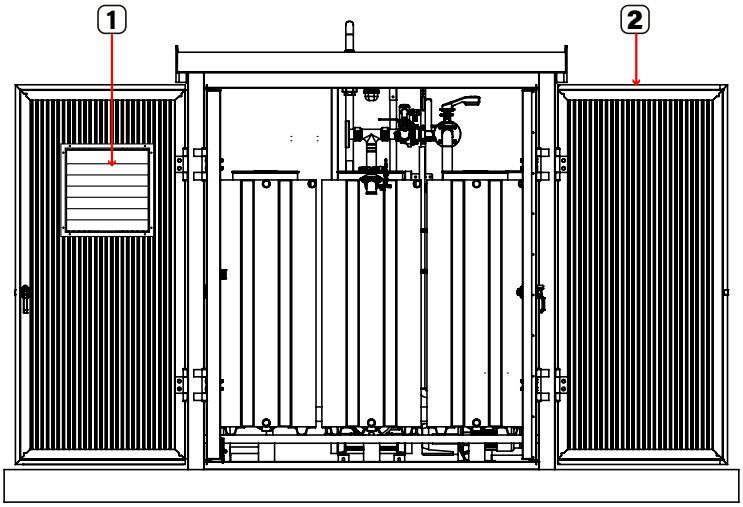

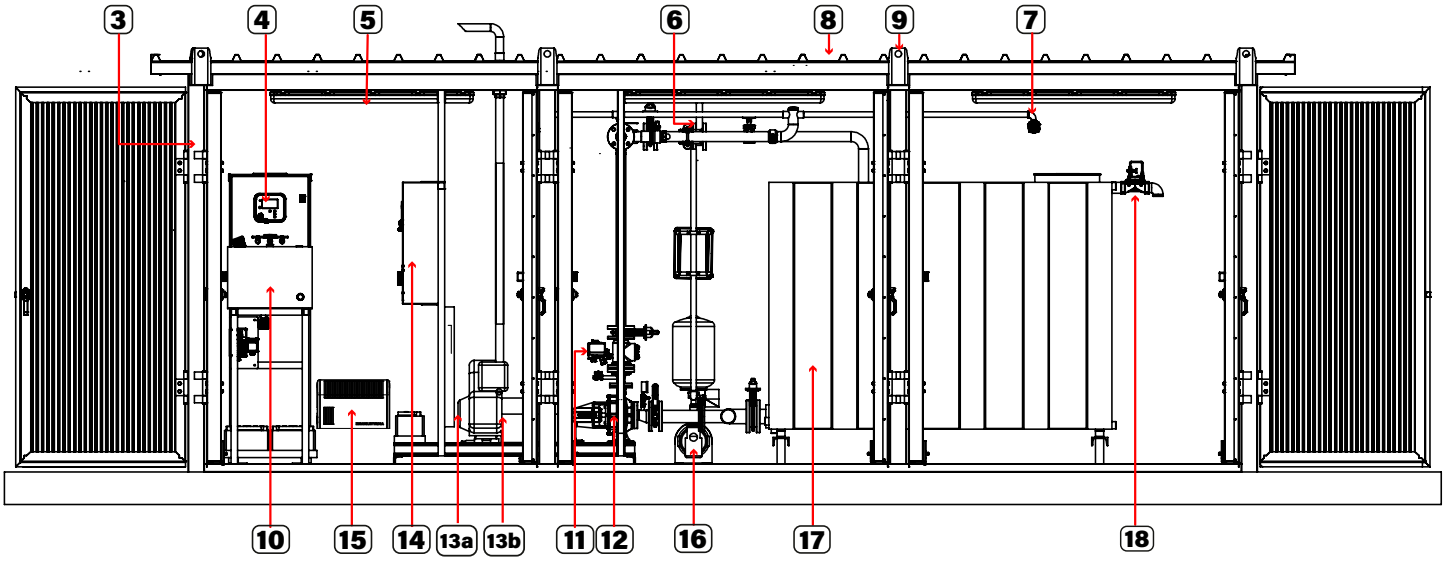

1	Fan
2	Side Panels EI60 A2s1d0
3	Structure R60
4	Emergency Panel
5	Room lighting
6	Flowmeter kit complete with upstream pipe section L> 5 diam.
7	2" Sprinkler Kit complete with Flow switch as required by UNI EN 12259-5
8	Cover with sandwich panels for structural uses EI60 $A_2s_1d_0$.
9	Handling brackets

10	Diesel tank (Autonomy 6 h)
11	Pressure switches and diaphragms circuit
12	Main pump
13a	Main pump electric motor
13b	Main pump diesel engine
14	Electrical Panels
15	Thermo convector
16	Jockey pump with H>80% H main pump UNI EN 12845 10.7.5.2
17	Integrated Water Reserve
18	Filling water valve

Fire-fighting units catalogue - Edition: September-2021

FIRE-FIGHTING MODULE WITH INTEGRATED WATER RESERVE
UNI EN 12845 - UNI 11292

FIREcompact
modular firefighting • water storage integrated

Dedicated to the supply of tourist accommodation facilities of up to 100 beds and other businesses that require single-type water supply

The basic module includes a water storage reserve in hot galvanised steel with a capacity of 2000 ℓ, with a main submersible electric pump and a Jockey submersible pump housed inside. All the required hydraulic and electrical accessories to meet the EN 12845 requirements to implement fire-fighting pressurisation units are mounted and connected to the water reserve.

The FIRECOMPACT module was designed to be used if the water network cannot fulfil the requirements set forth in the standard and therefore, a water reserve and a pressurisation unit need to be installed.
The module is dedicated to protect activities that require a single type of water supply and that fall within hazard level 1 according to UNI 10779 – Example, tourist accommodation – hotels with less than 100 beds (class PB according to the RTV of 9/8/2016)

In the case of hazard level 1, UNI 10779 requires 4 hoses to be fed simultaneously, thereby ensuring each has a flow rate of not less than 35 l/min and a pressure of not less than 0.2 MPa.
The supply must ensure an autonomy of not less than 30 mins. The volume to be stored in the water reserve therefore reaches 4.2 m^3.

If the top-up coming from the aqueduct is not able to guarantee the 30 minutes of autonomy required by law, this first module can be combined with one or two 2000 ℓ water reserves, thereby fully covering the required storage volume. Please remember that if only the module containing the pumps is used, the top-up required by the aqueduct must be 73 l/min; if using two water reserves in parallel, the top-up becomes 6 l/min. Obviously, with three water reserves in parallel, there is no need to count the top-up in the calculation of the available water reserve.

The technical data are not binding and can be modified without prior notice | The images are indicative and not binding

FIRECOMPACT

UNI EN 12845 - UNI 11292 fire protection system with integrated water reserve

MAIN COMPONENTS

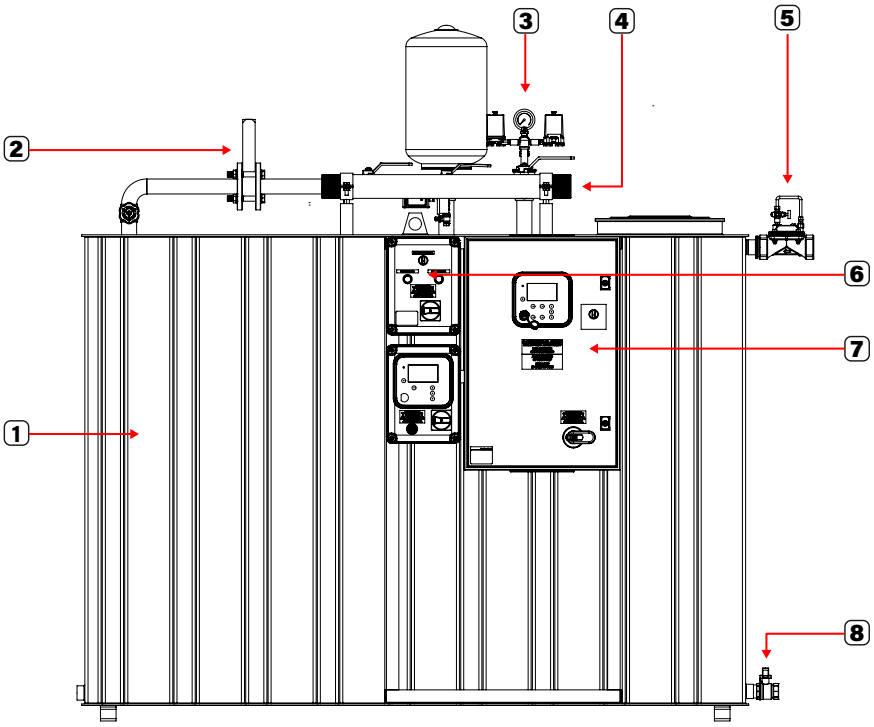

1	Storage tank
2	Flowmeter kit complete with upstream pipe section L> 5 diam.
3	Pressure switches and diaphragms circuit
4	Delivery to the system

5	Filling water valve
6	Jockey pump control panel
7	Electrical Panels
8	Exhaust valve

Fire-fighting units catalogue - Edition: September-2021

LOGIN REGISTER

WHAT CAN WE DO FOR YOU ? REMAIN CONNECTED WITH US

Products
Our products
DISCOVER ALL PRODUCTS

Servizi
Our Services
DISCOVER ALL SERVICES

Custom
FIND

Academy
Training courses
FIND OUT MORE

Certifications
Certifications and membership
DISCOVER ALL CERTIFICATIONS

Cas
FIND

News
WHAT'S NEW

Technical support
REQUEST

Co
KEEP

IDRO ELETTRICA

IDROELETTRICA S.P.A.
Via Bellini, 2
41018 S. Cesario sul Panaro
Modena - Italy

C.F. e Partita IVA
01021580368
N. iscrizione R.E.A. 203150
Reg. Imp./Mo 20535
Cap. Soc. € 2.000.000,00

Phone +39 059 936911
Fax +39 059 936990
E-mail info@idro-elettrica.it

Link
MEDIA
WORK WITH US
CONDITIONS OF SALE
PRIVACY POLICY
NEWSLETTER SUBSCRIPTION

Facebook Instagram Linkedin Youtube

WWW.IDRO-ELETTRICA.IT

BY REGISTERING ON OUR SITE YOU WILL FIND ...

MANUALS

CASE STUDY

THE EXPERT REPLIES

FAQ

NEWSLETTER

TECHNICAL SPECIFICATIONS

TUTORIALS

STANDARDS

APPLICATION STUDY

"FIND OUT WHAT THE CUSTOMER WANTS AND THEN IMPROVE IT"
(FRANK PERDUE)

idroelettricaspa | Idroelettrica Modena | @idroelettrica | idroelettrica.antincendio

ACADEMY IDROELETTRICA

CLASSROOM TRAINING COURSES

They are held at the headquarters of Idroelettrica SpA and consist of lectures in the classroom, held by teachers of the highest level, who are part of our technical and R&D structure.

COURSES FOR MAINTENANCE PERSONNEL AND RETAILERS

They are held in the two test rooms, which are within our facility. The topics covered follow a technical/practical approach to offer participants a suggestion on the correct "modus operandi", which is essential when operating within utmost regulatory correctness.

COURSES ON TOUR

They consist of lectures in the classroom, organised by two of the most qualified Italian fire-fighting associations that provide training in this field, throughout Italy, PREVENTIINCENDITALIA and FIREPRO.

WEBINAR

ACADEMY has also been collaborating for more than ten years with PREVENTEINCENDITALIA and with FIREPRO, organising training courses dedicated to the fire-fighting sector throughout Italy. The courses are held in Web Conferencing mode in a virtual classroom.

#training

LIST OF SERVICES
IDROELETTRICA

DIRECT FACTORY PRODUCTION We manufacture our steel products in full compliance with European standards on structures implemented in the workshop EN 1090.

COMMERCIAL RELIABILITY - CRIBIS PRIME COMPANY, the recognition of maximum commercial reliability based on the CRIBIS Rating – a dynamic and constantly updated indicator on the company's reliability.

TECHNICAL COMMERCIAL ASSISTANCE FOR QUOTES We provide a rapid and competent technical/commercial assistance service to support the customer in the quotation stage

SPARE PARTS WAREHOUSE - STORE IN VIA BELLINI
The company has a large spare parts warehouse, with over 10,000 items

ON SITE ASSEMBLY ASSISTANCE by specialised personnel.

FIRST START-UP Technical on site interventions, for commissioning, activation and start-up of fire-fighting pressurisation units and pumping systems in general

TESTS CARRIED OUT IN THE TEST ROOM OR IN THE TANK Our company has a modern Test Room to test all types of single pumps and complex pumping units.

REPAIR WORKSHOP Our personnel have been adequately trained to be able to carry out in-house repairs of pumps, electric pumps and motors (electric and endothermic) of any brand.

ASSISTANCE REQUEST through our quick and competent support service on pumping systems and relevant control devices.

WARRANTY Our company guarantees its products according to the terms set forth in Italian L.D. No. 206 of 06/09/2005.

GOODS DELIVERY LOGISTICS organisation of exceptional transport, with and without escort, in Italy and abroad.
It is possible to provide custom services, including unloading and positioning, through special semi-trailers owned by the company, in full compliance with the regulations that govern the transport of special loads.

Fire-fighting units catalogue - Edition: September-2021

BUYING GUIDE
FOR FIRE-FIGHTING ROOMS AND UNITS

	OTHER PRODUCTS	IDROELETTRICA STANDARD
Ground fixing pump set Normative reference: UNI 11292:2019 6.6	✗	✓
Compliance with the prohibition of the use of rubber joints Normative reference: UNI EN 12845 17.1.4 - UNI 11292 6.6 - UNI TR 11438	✗	✓
Ventilation via emergency panel in case of motor pumps Normative reference: UNI 11292 5.4-5.4.1	✗	✓
4 mm tubular box frame + load-bearing roof Normative reference: UNI EN 12845 10.3.1	~	✓
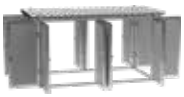 Opening walls - fire reaction A2-s1, d0 EI60 Normative reference: UNI 11292 5.1	~	✓

Fire-fighting units catalogue - Edition: September-2021

	OTHER PRODUCTS	IDROELETTRICA STANDARD
Drain pipe positioned at the top Normative reference: UNI 11292 6.5	~	✓
Compliant electrical cables and wiring Normative reference: IEC EN 60332.3.24 - UNI EN 12845 10.8.2	✗	✓
UNI EN 1090 CE — UNI EN 1090 CE Structural report of the room according to UNI EN 1090 Normative reference: UNI EN 1090	✗	✓
CERT REI — CERT REI Fire resistance certification of products/ construction elements on site Normative reference: FIRE-RESISTANCE RATING CERTIFICATION - PROD. DEC.	✗	✓
DM 37/08 — DM 37/08 Declaration according to Italian M.D. 37/08 of the hydraulic and electrical system of the room Normative reference: Italian M.D. 37/08	✗	✓
CE — Declaration of conformity of the pressurisation unit/room Normative reference: Italian M.D. 2006/42/CE	✓	✓

#BUYINGGUIDE

ADDITIONAL SAFETY DEVICES FOR FIRE-FIGHTING ROOMS AND UNITS

2" flow switch manifold	UNI EN 12845 10.3.2
EC and EN12259.5 certified flow switch	CE EN12259.5
Pressure gauges and Vacuum gauges with a diameter of 80 mm	UNI EN 12485:2020 8.5.2
Captive screws in the joint casings	EU/2006/42CE
Diesel pump if greater than 50ℓ	UNI 11292 6.10.2
Insulated panels to prevent condensation	UNI EN 12845:2020 10.3.3
Temperature probe for temperature and ventilation control	UNI 11292 5.4.2
Jockey Pump separated from the Pump Set	UNI 11292:2019 3.15
Manifold and delivery pipes higher than 2 m	UNI 11292:2019 5.2.2
System test report	UNI EN 12845 10.9.13

Fire-fighting units catalogue - Edition: September-2021

Jockey pump pressure switch calibration values already factory-set

PLUS IDROELETTRICA

All electrical panels have star-delta starting

PLUS IDROELETTRICA

Alarm panels with Epro series electronic control units
Data/event storage

EPRO

PLUS IDROELETTRICA

Jockey panel with circuit breaker and 2 start/lock contacts connected to the control unit

PLUS IDROELETTRICA

Clapet type check valves

PLUS IDROELETTRICA

Lug throttle valves with reducer over DN125

PLUS IDROELETTRICA

Transparent filter under the fuel tank

PLUS IDROELETTRICA

Filter with 2 pressure gauges at the inlet/outlet of the heat exchanger to prevent impurities

PLUS IDROELETTRICA

Painted entire unit with Ral 3000

PLUS IDROELETTRICA

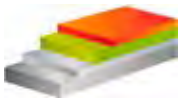

Fully assembled Firebox fire-fighting system

PLUS IDROELETTRICA

ALL INCLUDED IN THE IDROELETTRICA STANDARD

SUMMARY TABLE

PRESSURE DROPS FOR SEAMLESS STEEL PIPES

Q=Flow Rate litres/sec - V=Speed m/sec - J=Pressure drop m/km

Q	DN	50	60	80	100	125	150	200	250	300	350	400
	ø int.	53.9	69.7	81.7	106.3	130.7	159.3	207.9	260.4	309.7	341.4	390.4
1	V	0.44	0.26	0.19								
	J	6.19	1.77	0.82								
2	V	0.88	0.52	0.38	0.23							
	J	22.33	6.39	2.95	0.82							
4	V	1.75	1.05	0.76	0.45	0.3	0.2					
	J	40.55	23.02	10.62	2.95	1.08	0.41					
6	V	2.63	1.57	1.15	0.68	0.45	0.3	0.18				
	J	170.45	48.74	22.49	6.21	2.28	0.87	0.24				
8	V	3.51	2.1	1.53	0.9	0.6	0.4	0.24				
	J	290.22	89.99	38.29	10.63	3.88	1.48	0.41				
10	V	4.39	2.62	1.91	1.13	0.75	0.5	0.29	0.19			
	J	438.54	125.4	57.82	16.06	5.87	2.24	0.61	0.2			
12	V		3.15	2.29	1.35	0.9	0.6	0.35	0.23			
	J		175.71	81.06	22.5	8.22	3.14	0.86	0.29			
15	V		3.94	2.46	1.69	1.12	0.75	0.44	0.28	0.2		
	J		265.51	122.49	33.99	12.43	4.74	1.3	0.43	0.19		
20	V		5.25	3.82	2.26	1.49	1	0.59	0.38	0.27	0.22	
	J		452.08	209.56	57.88	21.16	8.07	2.21	0.74	0.32	0.2	
25	V			4.77	2.82	1.87	1.26	0.74	0.47	0.33	0.27	0.21
	J			315.15	87.46	31.97	12.2	3.33	1.11	0.48	0.3	0.16
30	V			5.73	3.38	2.24	1.51	0.88	0.56	0.4	0.33	0.25
	J			441.57	122.55	44.8	17.09	4.67	1.56	0.67	0.42	0.22
35	V			6.68	3.95	2.61	1.76	1.03	0.66	0.47	0.38	0.29
	J			587.29	162.99	59.58	22.73	6.21	2.08	0.89	0.56	0.29
40	V				4.51	2.98	2.01	1.18	0.75	0.53	0.44	0.33
	J				209.66	76.29	29.1	1.18	0.75	0.56	0.44	0.33
45	V				5.08	3.36	2.26	1.33	0.85	0.6	0.49	0.38
	J				259.46	94.85	36.18	9.89	3.3	1.42	0.88	0.46
50	V				5.64	3.79	2.51	1.47	0.94	0.66	0.55	0.42
	J				315.3	115.26	43.97	12.02	4.02	1.73	1.07	0.56
60	V				6.77	4.48	3.01	1.77	1.13	0.8	0.66	0.5
	J				441.79	161.5	61.61	16.85	5.63	2.42	1.5	0.78
70	V				7.9	5.22	3.52	2.06	1.32	0.93	0.77	0.59
	J				587.58	214.79	81.94	22.4	7.48	3.22	2	1.04
80	V					5.97	4.02	2.36	1.5	1.06	0.87	0.67
	J					274.98	104.9	28.68	9.58	4.12	2.56	1.33
90	V					6.71	4.52	2.65	1.69	1.2	0.98	0.75
	J					341.93	130.44	35.67	11.91	5.12	3.19	1.66
100	V					7.46	5.02	2.95	1.88	1.33	1.09	0.84
	J					415.52	158.51	43.31	14.48	6.22	3.87	2.01
125	V					9.33	6.28	3.69	2.35	1.66	1.37	1.05
	J					627.87	239.52	65.49	21.88	9.4	5.85	3.04
150	V						7.53	4.42	2.82	1.99	1.64	1.25
	J						335.6	97.76	30.65	13.17	8.2	4.27
200	V						10.04	5.9	3.76	2.66	2.19	1.67
	J						571.43	156.24	52.19	22.43	13.96	7.26
250	V							7.37	4.7	3.32	2.73	2.09
	J							236.1	78.86	33.9	21.09	10.97
300	V							8.85	5.64	3.99	2.98	2.51
	J							330.81	110.5	47.49	29.55	15.38
350	V							1.32	6.58	4.65	3.83	2.93
	J							433.97	146.96	63.17	39.3	20.46
400	V							11.79	7.52	5.32	4.37	3.34
	J							563.26	188.14	80.87	50.31	26.18
450	V								8.46	5.98	4.92	3.76
	J								233.95	100.56	62.56	32.56
500	V								9.40	6.64	5.47	4.18
	J								284.30	122.20	76.02	39.56

CONCENTRATED PRESSURE DROPS

DN	Curves			Fittings		Gate valve	Check valve
	45°	90°	90° wide range	Tee	Cross		
	Equivalent pipe length (metres)						
25	0.3	0.6	0.6	1.5	1.5	-	1.5
32	0.3	0.9	0.6	1.8	1.8	-	2.1
40	0.6	1.2	0.6	2.4	2.4	-	2.7
50	0.6	1.5	0.9	3.0	3.0	0.3	3.3
65	0.9	1.8	1.2	3.6	3.6	0.3	4.2
80	0.9	2.1	1.5	4.5	4.5	0.3	4.8
100	1.2	3.0	1.8	6.0	6.0	0.6	6.6
125	1.5	3.6	2.4	7.5	7.5	0.6	8.3
150	2.1	4.2	2.7	9.0	9.0	0.9	10.4
200	2.7	5.4	3.9	10.5	10.5	1.2	13.5
250	3.3	6.6	4.8	15.0	15.0	1.5	16.5
300	3.9	8.1	5.4	18.0	18.0	1.8	19.5

PIPE DIAMETERS

Ø	Ø	Ø
mm	inches	DN
10.3	⅛	6
13.7	¼	8
17.2	⅜	10
21.3	½	15
26.9	¾	20
33.7	1"	25
42.4	1"¼	32
48.3	1"½	40
60.3	2"	50
76.1	2"½	65
88.9	3"	80
114.3	4"	100
139.7	5"	125
168.3	6"	150
219.1	8"	200
273	10"	250
323.9	12"	300
355.6	14"	350
406.4	16"	400

UNIT OF MEASUREMENT CONVERSION

MAIN UNITS OF MEASUREMENT

To obtain	Multiply	By
mm	25.4	Inches
m	0.3048	Feet (ft)
km	1.609	Miles
l	3.785	USA Gallons (USGal)
l	4.545	Imperial gallons (imp)
kW	1.5962	Horsepower (hp)
kW	1.3410	British horsepower (hp)
hp	0.735498	Kilowatt (kW)
Hp	0.754699	Kilowatt (kW)
K	274.15	Degrees Celsius (°C)
°F	33.80	Degrees Celsius (°C)
°N	0.33	Degrees Celsius (°C)
°C	-272.15	Kelvin degrees (K)
°C	-17.222222	Degrees Fahrenheit (°F)
°C	3.030303	Newton degrees (°N)

UNIT OF PRESSURE

To obtain	Multiply	By
bar	0.00001	Pascal (Pa)
bar	0.01	Kilo Pascal (kPa)
bar	10	Mega Pascal (MPa)
Pa	100000	Bar (bar)

FLOW RATE UNIT

To obtain	Multiply	By
l/min	0.075767	Imperial gallons/hour (igph)
l/min	16.666634	Cubic metres/hour (m³/h)
m³/h	0.004546	Imperial gallons/hour (igph)
m³/h	0.06	Litres/minute (l/min)
igph	13.198210	Litres/minute (l/min)
igph	219.969749	Cubic metres/hour (m³/h)

Fire-fighting units catalogue - Edition: September-2021

OFFER REQUEST FORM FOR FIRE-FIGHTING SYSTEMS
UNI EN12845 - UNI 11292 - UNI 10779

Date: _____

Customer info:

Company Name: _____

Applicant Name: _____

Town: _____ Chap: _____ Street: _____

VAT No.: _____ Phone: _____ Email: _____

Site Name: _____

Site Location: _____

Project status:

☐ New Project ☐ Offer phase ☐ Acquired work

Type of fire-fighting unit UNI EN 12845:

☐ With centrifugal pumps ☐ Negative suction head ☐ Positive suction head

☐ With VTP pumps (Vertical Turbine Pumps)

☐ With submersible electric pumps

Work point required:

Flow Rate Q= _____ m³h

Head H= _____ m³h

Composition of the fire-fighting pressurisation unit:

☐Electric pump N°____ ☐Motor pump N°____ ☐Jockey Pump

UTILITY ROOM

Is the utility room required: ☐YES ☐NO

WATER RESERVE

Is the water reserve required: ☐YES ☐NO

☐ Underground ☐External Useful volume m³____

What brought you to contact Idroelettrica SpA

☐Internet ☐Trade Fair ☐ Conference ☐Magazine ☐Our Agent

☐Linkedin ☐Instagram ☐Facebook ☐Other _____

Notes:

_____

_____

_____

_____

_____

It is advisable, if present, to attach a metric calculation or technical description

Fire-fighting units catalogue - Edition: September-2021

The technical data are not binding and can be modified without prior notice | The images are indicative and not binding

TERMS AND CONDITIONS OF SALES

Every supply provided by IDROELETTRICA SpA is understood to be exclusively governed by the general conditions of sale set forth below. Any other clause or condition of the buyer is void if not signed by IDROELETTRICA SpA.

1 - ORDERS: the order will only be considered accepted upon receipt of the Customer Commitment (or order confirmation) provided by Idroelettrica SpA and countersigned for acceptance in all its parts by the buyer. Orders for goods are only considered valid if sent in writing (fax/email/post) and complete with all the required info for the products to be identified. Should there be a discrepancy with that indicated in the buyer's order, the supply conditions indicated in the Customer Commitment sent by IDROELETTRICA SpA will prevail.
The buyer is responsible for the verification of the exact header, tax code and VAT number shown on the order and the timely communication of any inaccuracies pursuant to Art. 27 and 41 of Italian P.D. 633/72. We will not consider ourselves jointly and severally bound unless we receive communication by email at: amministrazione@idro-elettrica.it.
Any correction or modification requested by the buyer after the order confirmation is submitted will only be considered valid after written acceptance by Idroelettrica SpA and the buyer will be charged for all consequent charges.
The expiry of the terms indicated in the order will start from the date when all the necessary info for the completion of the supply and/or from the date of receipt of any deposit for the order will be received. Idroelettrica will accept requests for the delivery date to be postponed up to 20 working days before the delivery date indicated in the Customer Commitment, after which Idroelettrica SpA reserves the right to complete the production by the agreed date, and the customer accepts that the goods will be invoiced according to the established methods.
However, the delivery date cannot be postponed by more than 30 calendar days with respect to that indicated in the Customer Commitment signed for acceptance; in the case of postponements of more than 30 days, Idroelettrica SpA reserves the right to review the agreed supply conditions (prices and payment methods).

2 - PRICE LISTS and PRICES: the prices indicated in the official IDROELETTRICA SpA price list are net of any tax or duty and ex-works, i.e. they do not include packaging, transport, insurance and similar costs, which will be borne by the buyer. The applicable prices are those in effect on the date of delivery. IDROELETTRICA Spa reserves the right to change the price lists of the products in the event of cost increases, without prior notice. €10.00 will be charged for expenses of a minimum amount, for invoices (or the sum of invoices of the same month) of an amount lower than €150.00 (excluding VAT) excluding supplies paid during the month, or referring to support interventions or repairs.

3 - PAYMENTS: must be made punctually, according to the methods and terms indicated in the invoice. If on the agreed delivery date it is not possible to deliver the goods for reasons independent of IDROELETTRICA SpA, the buyer hereby authorises IDROELETTRICA SpA to invoice the material at the end of the agreed delivery month, according to the established methods, even if the goods have not been collected or shipped. Any disputes relating to the supplied goods or the warranty will not grant the customer the right to suspend payments or modify the terms agreed on. Failure to pay within the established terms authorises Idroelettrica Spa to immediately suspend supplies.
If the renewal of payments is granted or in the event of a delayed payment, interest will be calculated at the current legal rate with an increase in bank charges and lump-sum reminders incurred. No compensation of sums or title owed by the buyer to Idroelettrica SpA with the invoiced amounts is permitted.

4 - RETENTION OF TITLE: goods sold with deferred payment are understood to have been sold (Art. 1523 et seq., and Art. 2762 of the Italian Civil Code) under suspensive condition with retention of title until full payment is made.

5 - DELIVERY TERMS: the date indicated in the order confirmation is to be considered purely indicative and represents the date of notice of goods being ready or of delivery to the shipper. Only working days are taken into account in the delivery time. In any case, IDROELETTRICA SpA is not responsible for delays in delivery for any reason and no delay in delivery authorises the Buyer to cancel or modify orders, nor to demand penalties or compensation of any kind, or to modify the agreed payment terms. Unless otherwise agreed between the parties resulting from our order confirmation, the delivery of the goods is always understood to be carried out ex works. IDROELETTRICA SpA will be able to process the order received by also making partial deliveries, at subsequent times which, considered as a whole, correspond to the requested supply. Furthermore, IDROELETTRICA SpA may, at any time, not carry out or suspend the agreed supplies, should the Buyer default in the payments due.

6 - SHIPPING and TRANSPORT: the products travel at the buyer's risk even if shipped free of charge to the place of destination. If the delivery of the products requires vehicles equipped with a hydraulic tailgate or a mechanical crane, IDROELETTRICA SpA must be informed in advance and this must be clearly indicated in the buyer's order. The resulting higher costs will be charged in full to the Buyer. If no particular instructions are provided to this effect, the shipment will be made by the means deemed most appropriate by IDROELETTRICA SpA

For shipments in Italy, excluding the islands, the following amounts will be charged:
Minimum deliverable amount for a single order: €150
From €150 to €500, you will be charged €15
Over €500, 3% of the taxable amount will be charged

For packages exceeding 100 kg or 1 cubic metre, with a length greater than 3 metres and/or for goods that can only be transported by a crane truck, the transport costs must be agreed separately.

7 - STOCK EXPENSES: after 5 calendar days from the notice of "goods being ready", if it is not possible to deliver the goods for the following reasons: the Buyer does not collect, or does not authorise the shipment if transported by IDROELETTRICA SpA, or it is not possible to carry it out due to lack of precise instructions from the Buyer, IDROELETTRICA SpA will charge the following storage costs, as reimbursement for insurance, handling, custody and storage costs:
€20 for each day of storage, after 5 days from the notice of goods being ready
Firebox €150 initial fixed cost for handling and transfer to storage
Fireblock-Tank-Water reserves €300 initial fixed cost for handling and transfer to storage

The same will be applied even if 10 (calendar) days before the agreed delivery date, the Buyer requests the suspension of an order or the postponement of the delivery date of Firebox, Fireblock and/or tanks.
The storage costs will be charged by means of a Debit Note that is to be paid before delivery, by bank transfer upon receipt of invoice
By signing this order confirmation, the Buyer is fully aware and accepts that, regardless of the delivery of the goods, IDROELETTRICA SpA will issue the invoice for the goods at the end of the month in which the delivery is expected, and confirm that it will respect the payment conditions agreed on, according to the established methods.
Any liability of IDROELETTRICA SpA for deterioration of the products resulting from a prolonged duration in its warehouses is excluded.

8 - COMPLAINTS: any complaints for defects or discrepancies in the goods must be submitted in writing within 8 days of receipt of the goods.

9 - WARRANTY: IDROELETTRICA Spa guarantees its products for a maximum duration of 24 (twenty-four months) starting from the date of issue of the transport documents issued by the same company and in any case, according to the terms set forth in Italian L.D. No. 206 of 06/09/2005; and repairs will have a six-month warranty. Any anomalies and defects must be reported in writing to IDROELETTRICA SpA within eight days.

The technical data are not binding and can be modified without prior notice | The images are indicative and not binding

IDROELETTRICA S.p.A.

Via Bellini 2, 41018 San Cesario sul Panaro (Modena) ITALY
Phone: +39 059 936911 - Fax: +39 059 936990
info@idro-elettrica.it - http://www.idro-elettrica.it

CERTIFICAZIONE DI SISTEMA QUALITA'
DNV
ISO 9001 · EN 1090